UNIMOTION

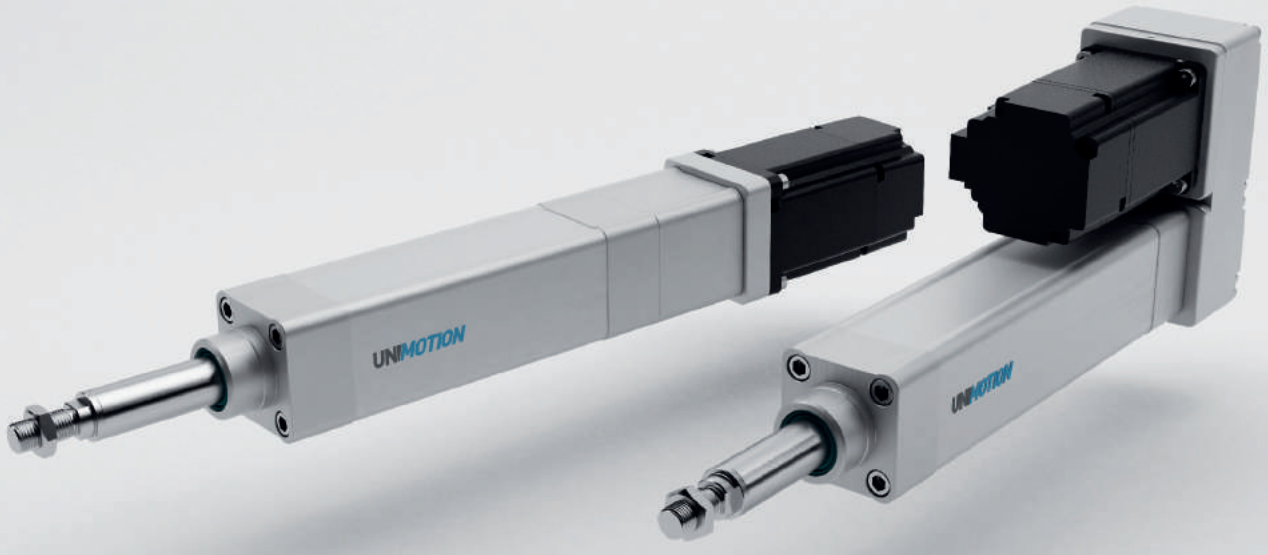

PNCE

ELECTRIC CYLINDER

ISO 15552

IP65

INDEX

Characteristics	1
Structural design	2
How to order	3
Technical data	4
Dimensions	11
Accessories	12
Lubrication position	20
Motor adapter with coupling	20
Motor side drive with timing belt	21
Couplings	22
Magnetic field sensor	23
Load torque calculation and determination of maximum axial load on the PNCE cylinder	24

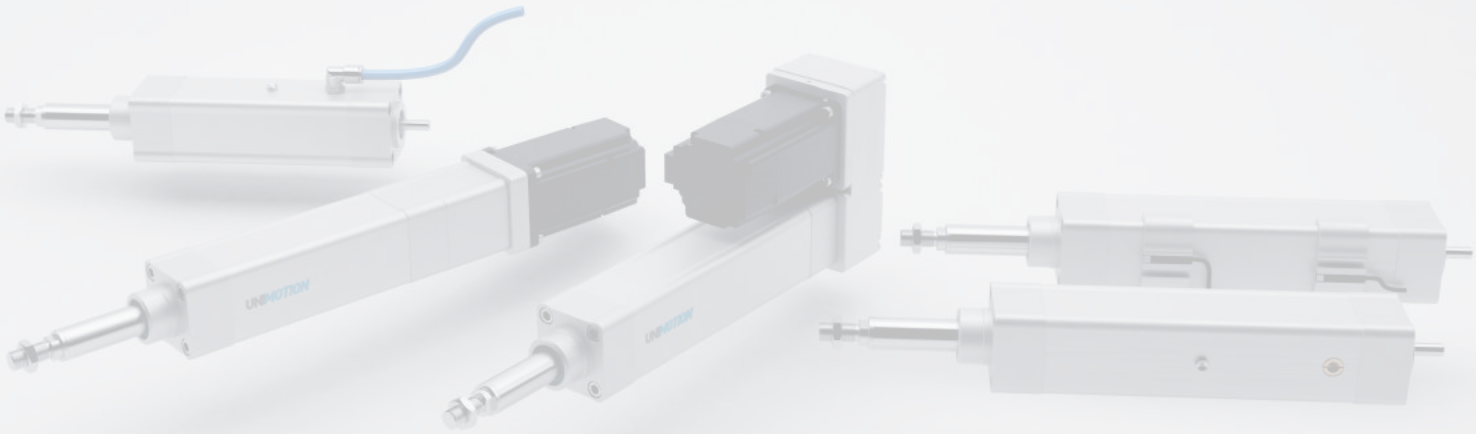

CHARACTERISTICS

The PNCE are electric cylinders with a precision ball screw drive. The electric cylinder is based on the standard ISO 15552. Its outer design and dimensions are very similar to pneumatic cylinders. High performance features such as, high speeds, good positioning accuracy and high repeatability are ensured through a precision ball screw with reduced backlash (preload on request) of the ball nut and non-rotating piston rod. For a long service life the re-lubrication can be done through a lubrication nipple.
The design with its smooth surfaces enables easy cleaning of the cylinder. In combination with a lubricant class H1 it is also suitable for food & beverage applications. It can additionaly equipped with switches and ISO standard accessories.

The excellent sealing of the components in the cylinder ensures an IP65 protection class and protects the interior of the cylinder from dust, water and other contaminants. Version IP65CR also offers a high corrosion resistance in harsh environments.

The aluminium profiles are manufactured according to the medium EN 12020-2 standard

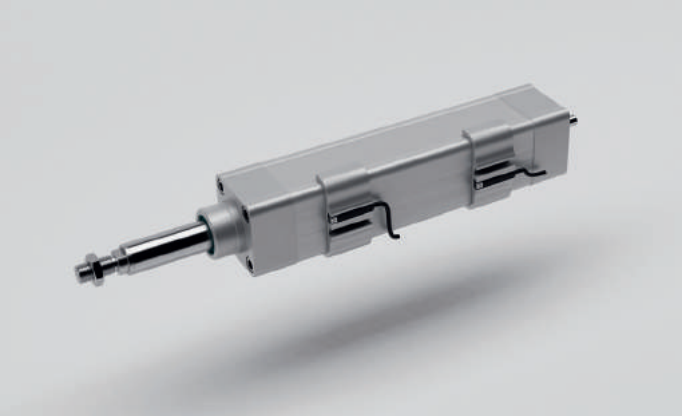

Sensor holder

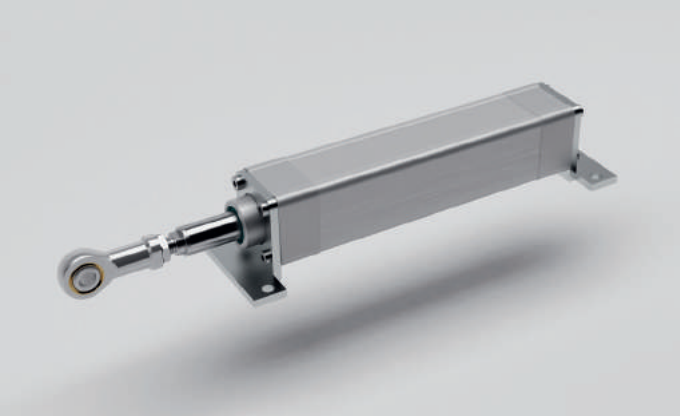

ISO standard accessories

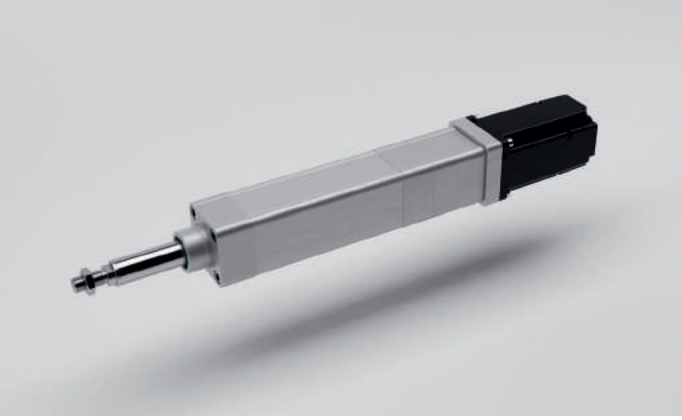

Motor adapter with coupling (IP65)

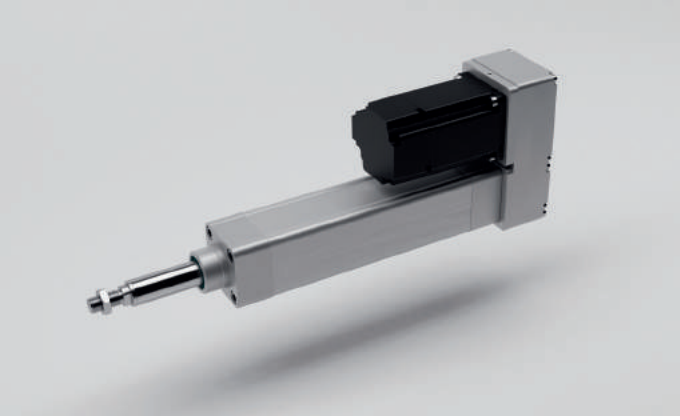

Motor side drive (IP65)

STRUCTURAL DESIGN

• Standard version (S)*

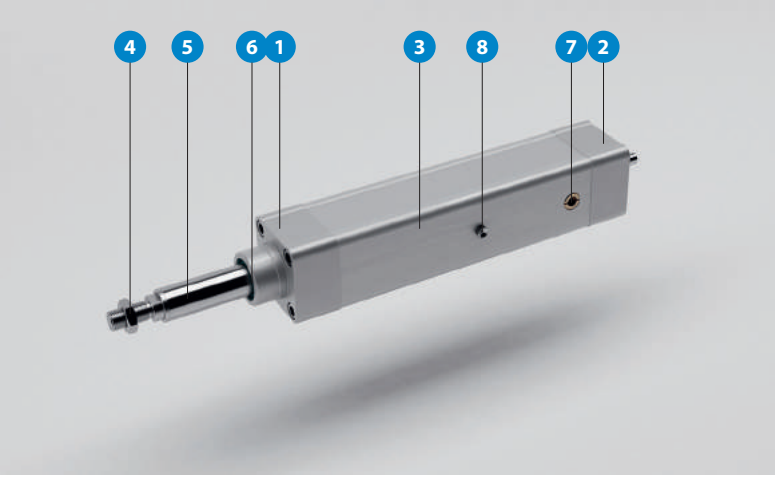

1 – Front cap
2 – Drive cap
3 – Smooth cylinder profile
4 – Hex nut
5 – Piston rod (stainless steel) with an anti-rotation device
6 – Piston rod seal
7 – Pressure compensation
8 – Lubrication nipple

* IP40 protection class

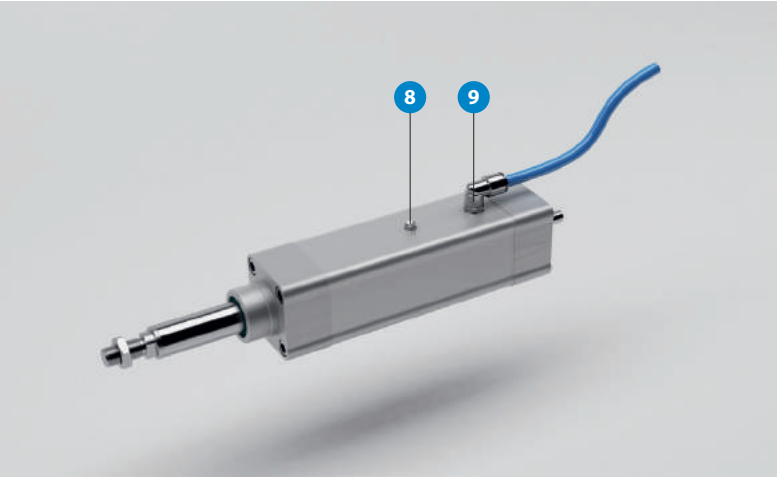

8 – Lubrication nipple
9 – Connection for pressure compensation

• IP65 protection class (IP65)

The appropriate sealing of the external parts ensures the electric cylinder the IP65 protection class. The IP65 protection class of the electric cylinder fulfils the specifications to IEC 60 529. The connection for pressure compensation in the cylinder profile ensures the exchange of air between the interior of the cylinder and the environment. This prevents the occurence of excess pressure or negative pressure inside the electric cylinder. It also protects the interior of the cylinder from the external media like dust and water.

• IP65 protection class with high corrosion resistance (IP65CR)

It offers high corrosion resistance in harsh environments.The version IP65CR includes all the features of the electric cylinder version IP65. In addition to ensuring high corrosion resistance all the external parts are corrosion resistant (e.g. the connection for pressure compensation, lubrication nipple, and the connection elements are made of stainless steel). More information about materials is available upon request in the extended material information list.

• For applications in the food industry (FI)

The version FI includes all the features of the electric cylinder version IP65CR. It is upgraded by materials suitable for some applications in the food industry. The cylinder is greased with a lubricant class NSF H1. The design with the smooth surfaces of the aluminium profile enables its quick and effective cleaning. During the cleaning the sealing air can be applied to the connection for pressure compensation. The use for the food & beverage industry is limited by the materials of the electric cylinder. More information about materials is available upon request in the extended material information list.

In order to improve the products in this catalogue the specifications are subject to change without notice.

HOW TO ORDER

PNCE - 40 - BS - 1610 - 200 - S - F - E20

Series:
PNCE

Size:
- 32
- 40
- 50
- 63

Screw type:
- BS: ball screw

Ball screw:
- PNCE 32: Ø12x5, Ø12x10
- PNCE 40: Ø16x5, Ø16x10, Ø16x16
- PNCE 50: Ø20x5, Ø20x10, Ø20x20, Ø20x50
- PNCE 63: Ø25x5, Ø25x10, Ø25x25

Absolute stroke [mm]:
Absolute stroke = Effective stroke + 2 × Safety stroke

Versions:
- S: Standard version
- IP65: IP65 protection class
- IP65CR: IP65 protection class with high corrosion resistance
- FI: For applications in the food industry (check the material information)

Option 1:
- Leave blank: standard
- F: female thread on the piston rod

Option 2:
- Extended piston rod E [mm]

TECHNICAL DATA

General technical data for the PNCE series

PNCE	Ball screw	Dynamic * load capacity	Maximum axial load **	Maximum drive torque	Maximum travel speed ***	Max. rotational speed	No load torque	Minimum stroke	Maximum stroke	Axial backlash (BS)	Maximum acceleration
	d×l [mm]	C [N]	F_{max} [N]	M_p [Nm]	v_{max} [m/s]	n_{max} [min^{-1}]	M_0 [Nm]	s_{min} [mm]	s_{max} [mm]	[mm]	[m/s^2]
32	12×5	5000	2540	2,2	0,48	5800	0,10	30	800	< 0,02	20
	12×10	3800	1270		0,97		0,15	30			
40	16×5	13150	6020	5,3	0,35	4200	0,15	40	900	< 0,02	20
	16×10	11550	3010		0,70		0,20	35			
	16×16	8170	1880		1,12		0,25	35			
50	20×5	14800	14600	12,9	0,28	3300	0,30	50	1000	< 0,02	20
	20×10	15900	7830	13,9	0,55		0,35	55			
	20×20	16250	3900		1,10		0,40	50			
	20×50	13000	1560		2,5	3000	0,50	30			
63	25×5	16700	16500	14,6	0,23	2700	0,50	40	1200	< 0,02	20
	25×10	15800	15800	28,0	0,45		0,55	40			
	25×25	13400	7940	35,1	1,13		0,65	30			

* Dynamic load capacity of ball screw drive. This value is the basis for calculating the service life.
** When considering service life, see page 10. This value needs to be considered when using the piston rod or mounting attachments' accessories.
*** Maximum travel speed depends of the absolute stroke of the PNCE, see diagrams on page 7.

Operating conditions

Operating temperature	0°C ~ +60°C
Protection class	IP40, IP65
Duty cycle	100 %

Recommended values of loads:

All the data of the dynamic load capacities (ball screw drive) stated in the upper table are theoretical without considering any safety factor. The safety factor depends on the application and its requested safety and service life.
We recommend a minimum safety factor $f_s = 5{,}0$, where f_s is defined as $f_s = C / F_m$.
See page 10 for information on how the applied mean axial load F_m affects the service life.

Mass and mass moment of inertia

PNCE	Ball screw	Moved mass **	Mass of the electric cylinder	Mass moment of inertia
	d×l [mm]	m_m [kg]	m_{PNCE} [kg]	J_{PNCE} [10^{-6} kg m^2]
32	12×5	0,32 + 0,0010 × (Absolute stroke + E)	1,10 + 0,0043 × Absolute stroke + 0,0010 × E	2,15 + 0,0128 × Absolute stroke + 0,0006 × E + 0,6333 × m_{load}
	12×10			2,75 + 0,0147 × Absolute stroke + 0,0025 × E + 2,5331 × m_{load}
40	16×5	0,44 + 0,0007 × (Absolute stroke + E)	1,45 + 0,0051 × Absolute stroke + 0,0007 × E	4,50 + 0,0395 × Absolute stroke + 0,0004 × E + 0,6333 × m_{load}
	16×10			5,35 + 0,0408 × Absolute stroke + 0,0018 × E + 2,5331 × m_{load}
	16×16			7,10 + 0,0436 × Absolute stroke + 0,0046 × E + 6,4846 × m_{load}
50	20×5	0,95 + 0,0012 × (Absolute stroke + E)	2,50+0,0073 × Absolute stroke + 0,0012 × E	17,75 + 0,0817 × Absolute stroke + 0,0007 × E + 0,6333 × m_{load}
	20×10			19,55 + 0,0839 × Absolute stroke + 0,0030 × E + 2,5331 × m_{load}
	20×20			26,75 + 0,0928 × Absolute stroke + 0,0118 × E + 10,1322 × m_{load}
	20×50	0,88 + 0,0012 × (Absolute stroke + E)	2,43 + 0,0073 × Absolute stroke + 0,0012 × E	73,80 + 0,1549 × Absolute stroke + 0,0740 × E + 63,3258 × m_{load}
63	25×5	1,00 + 0,0011 × (Absolute stroke + E)	3,05 + 0,0097 × Absolute stroke + 0,0011 × E	32,55 + 0,2358 × Absolute stroke + 0,0007 × E + 0,6333 × m_{load}
	25×10			34,45 + 0,2378 × Absolute stroke + 0,0028 × E + 2,5331 × m_{load}
	25×25	0,98 + 0,0011 × (Absolute stroke + E)	3,03 + 0,0097 × Absolute stroke + 0,0011 × E	47,30 + 0,2523 × Absolute stroke + 0,0172 × E + 15,8315 × m_{load}

** The moved mass is already considered in the equation for calculating the mass of the electirc cylinder m_{PNCE} and the mass moment of inertia J_{PNCE}. The moved mass includes the mass of the piston rod with the internal anti-rotation device and ball nut.

m_{load}	Applied mass to be moved	[kg]
E	Extended piston rod	[mm]
Absolute stroke		[mm]

In order to improve the products in this catalogue the specifications are subject to change without notice.

Maximum axial loading as a function of the travel speed for different values of absolute stroke (F_{max} - v curves)

PNCE 32

12×5

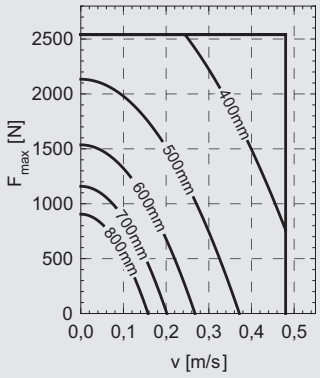

12×10

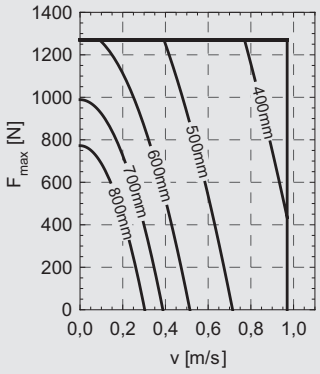

PNCE 40

16×5

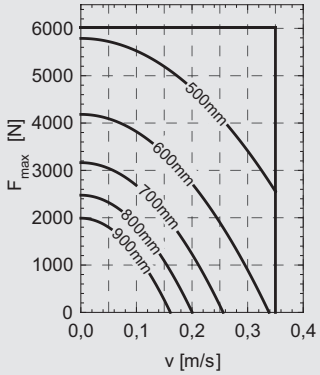

16×10

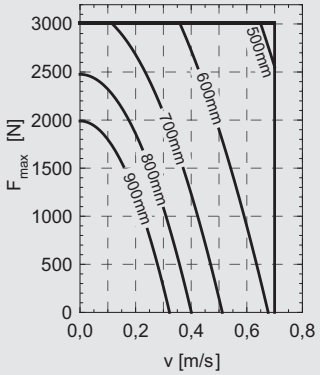

16×16

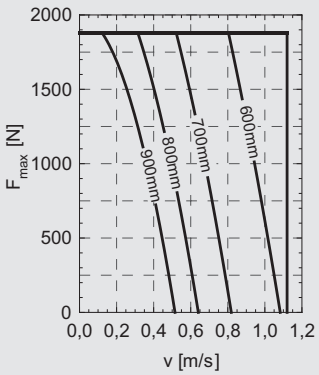

PNCE 50

20×5

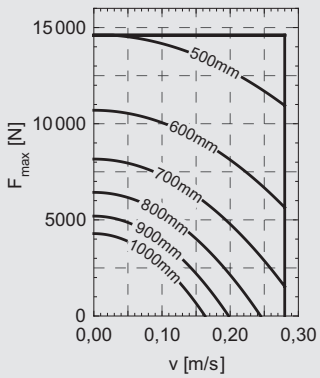

20×10

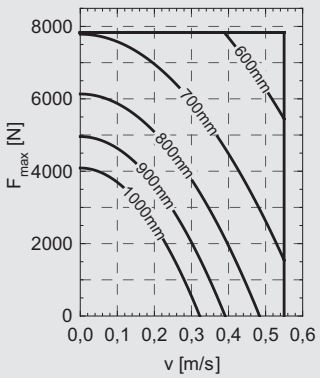

20×20

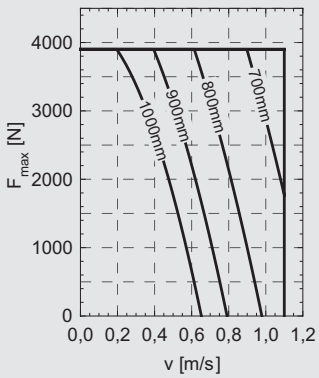

20×50

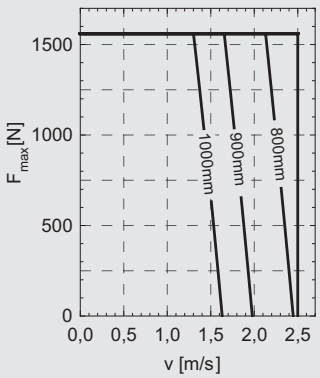

PNCE 63

25×5

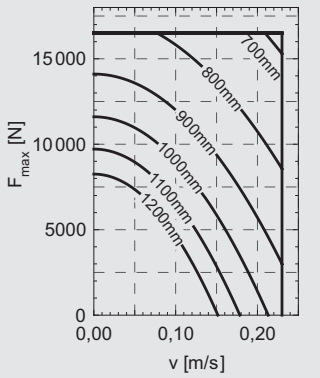

25×10

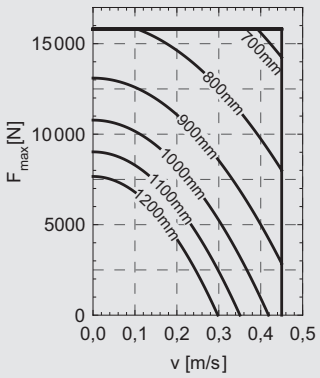

25×25

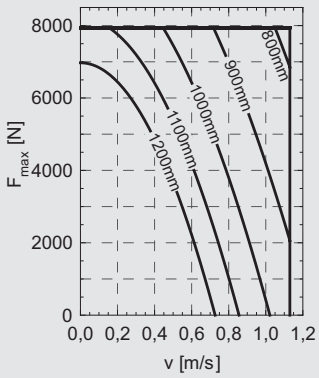

Maximum axial loading as a function of the absolute stroke (F_{max} - absolute stroke curves)

Schematically presented mounting cases

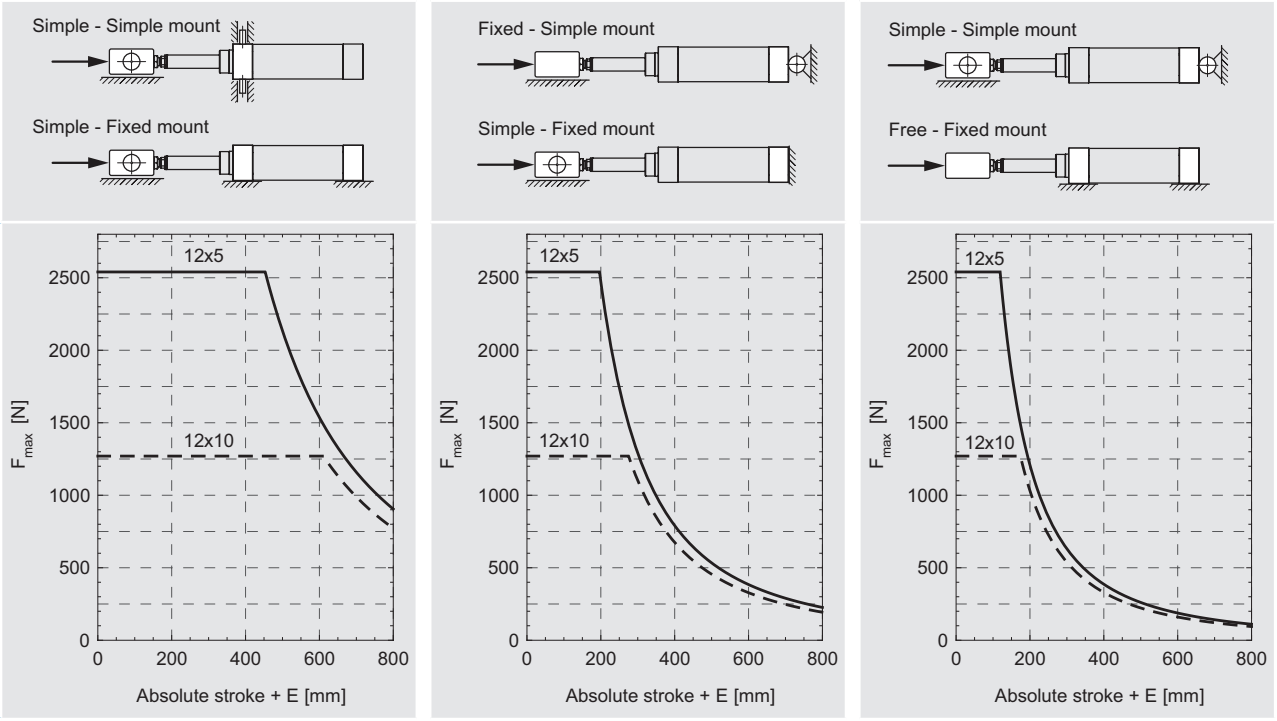

E	Extended piston rod	[mm]

In order to improve the products in this catalogue the specifications are subject to change without notice.

Schematically presented mounting cases

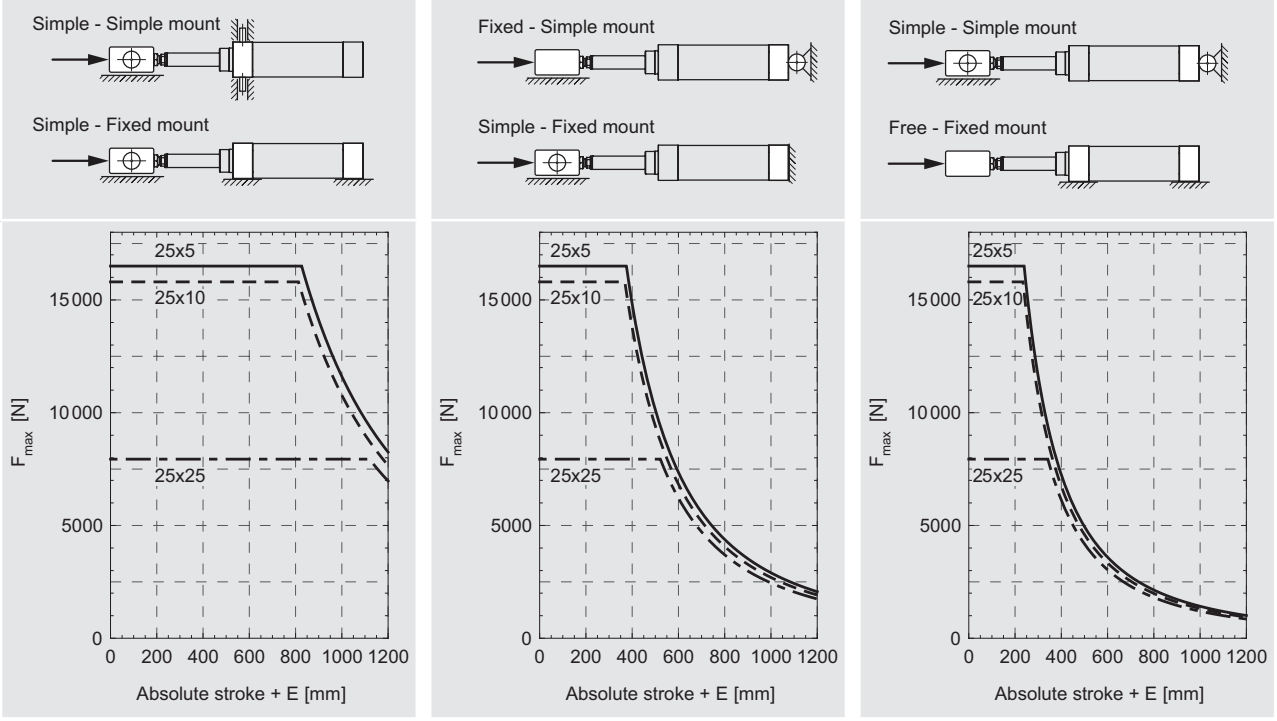

E	Extended piston rod	[mm]

Maximum travel speed as a function of the absolute stroke (v_{max} - absolute stroke curves)

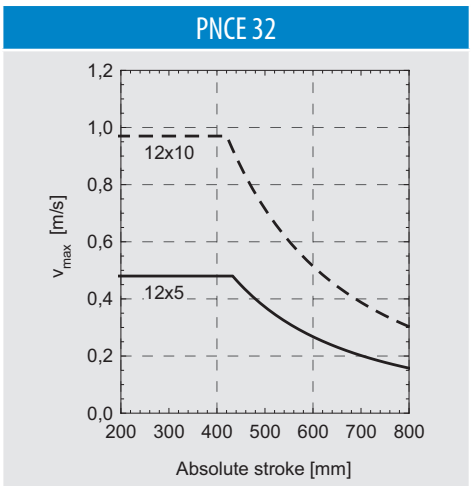

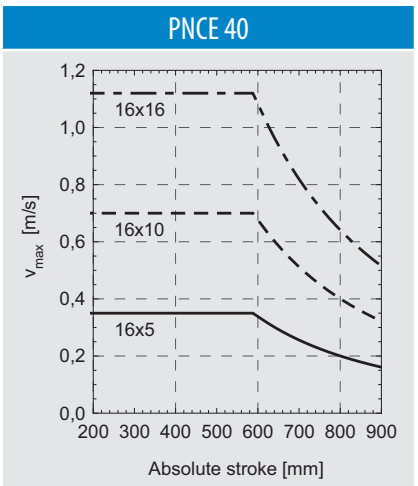

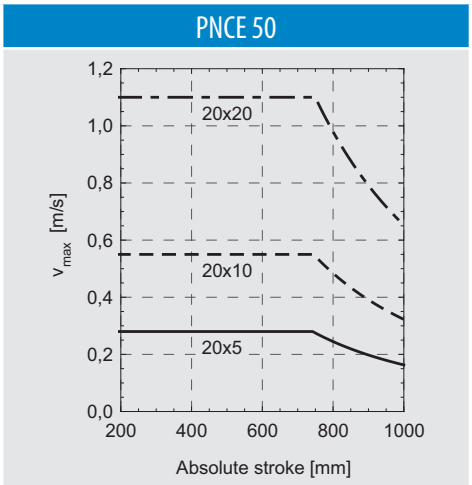

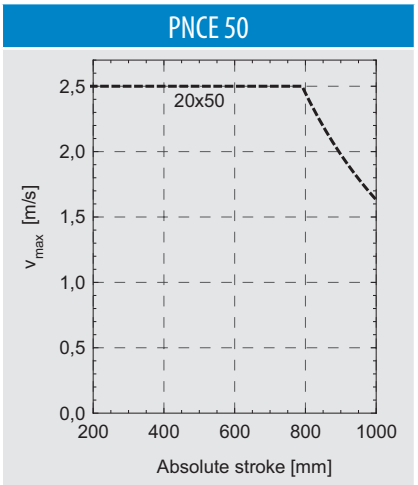

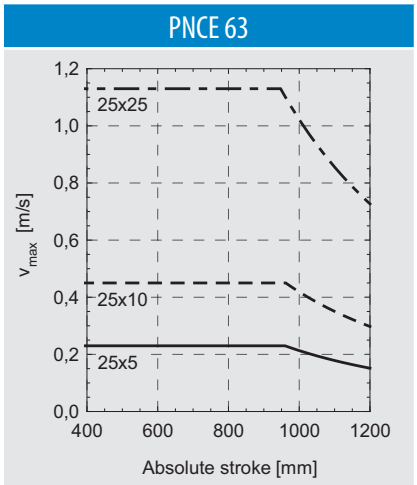

Maximum lateral loading as a function of the piston rod position for different values of the absolute stroke ($F_{lateral}$ - piston rod position curves)

PNCE 32

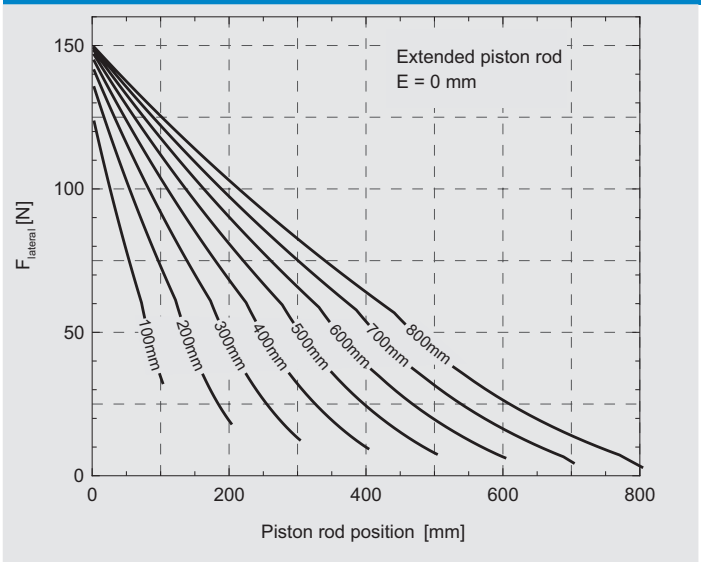

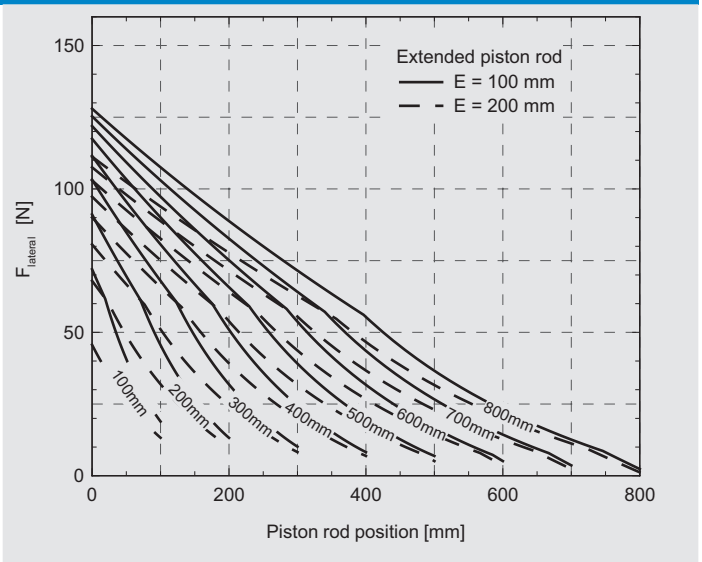

PNCE 40

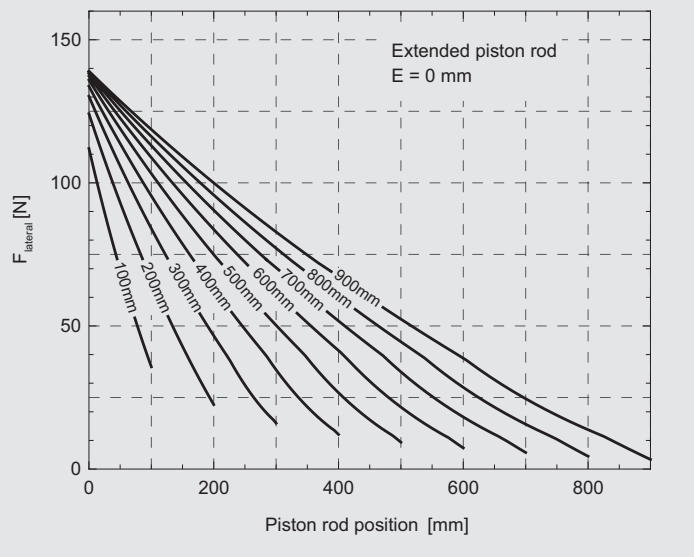

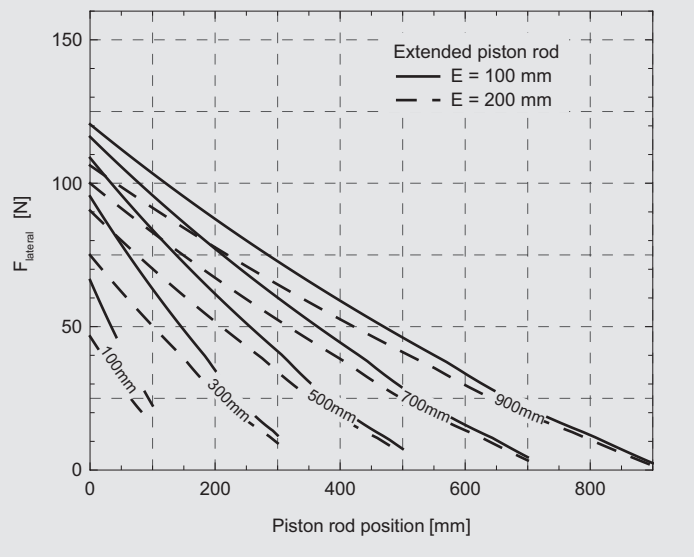

Values on the curves represent the absolute stroke

In order to improve the products in this catalogue the specifications are subject to change without notice.

PNCE 50

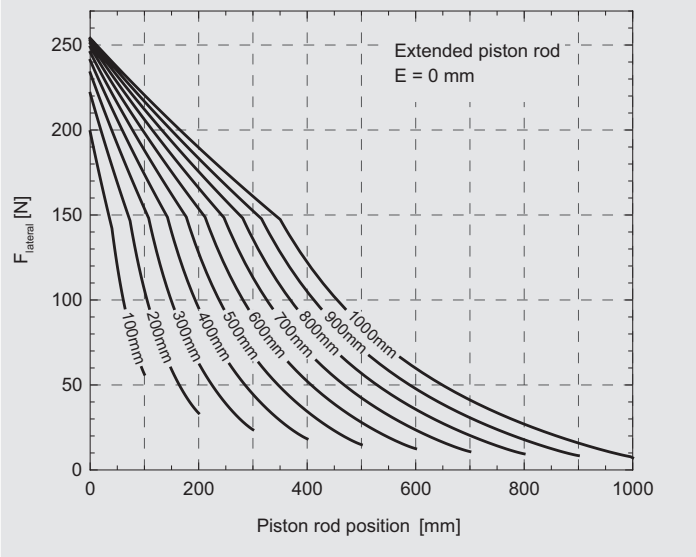

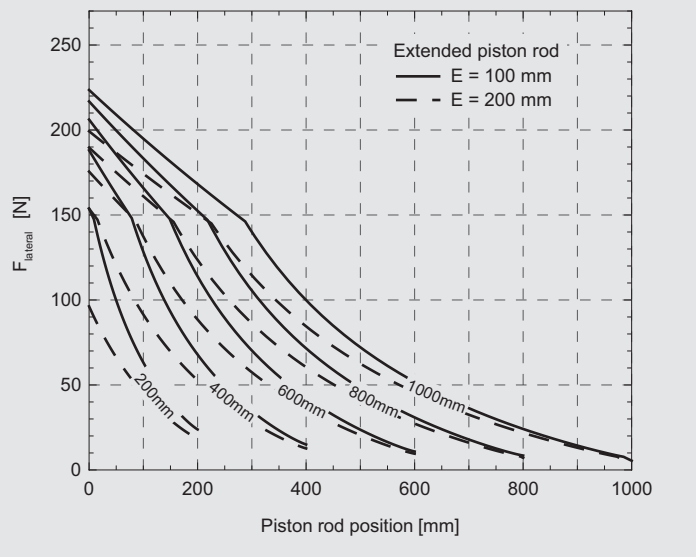

PNCE 63

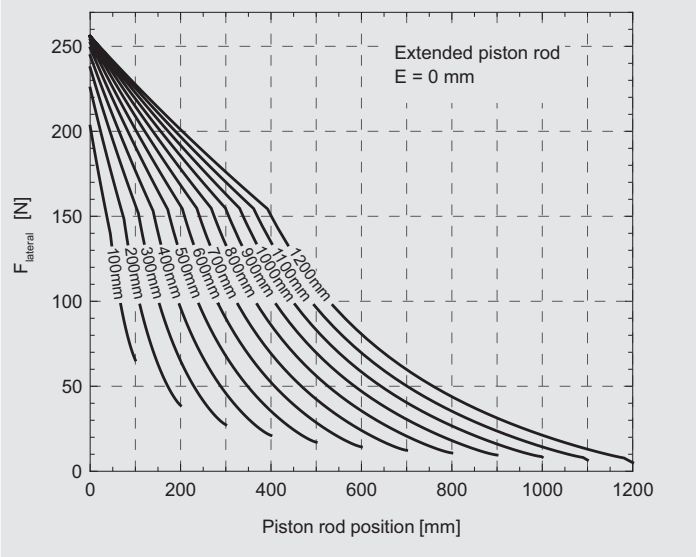

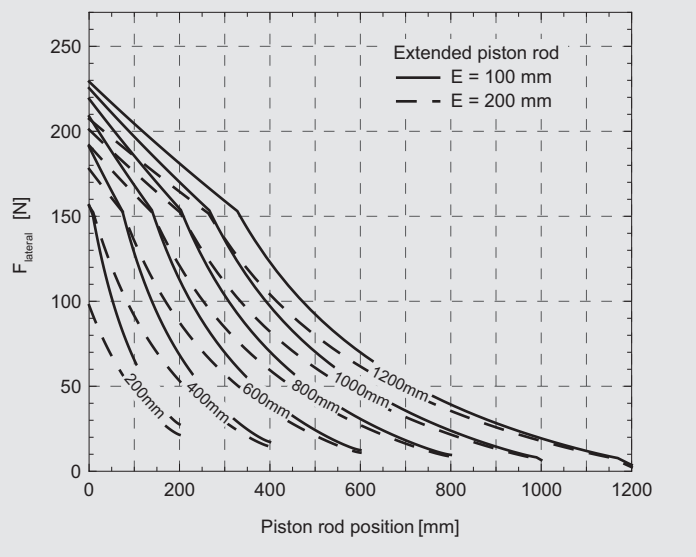

Values on the curves represent the absolute stroke

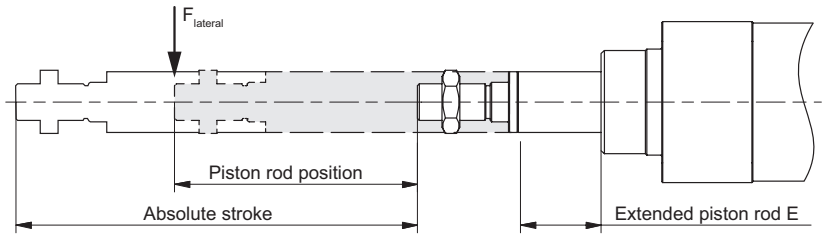

Diagrams taking into consideration
a travel speed of 0,5 m/s and an axial load of $F_{max}/4$

Service life - applied mean axial load F_m as a function of the service life L_{km}

PNCE 32

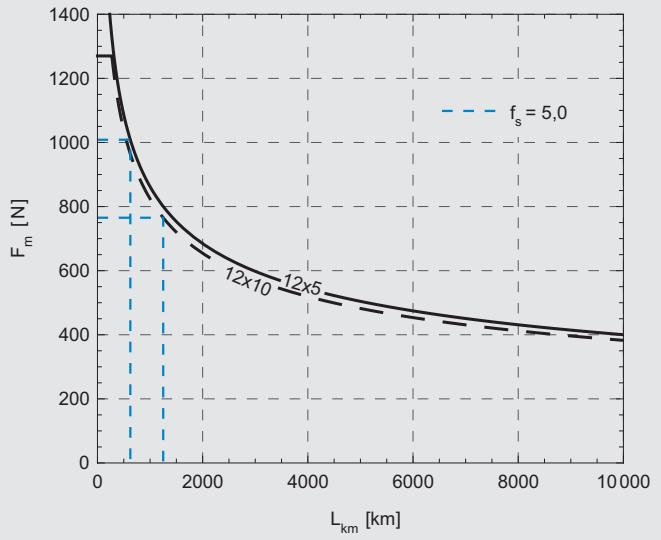

PNCE 40

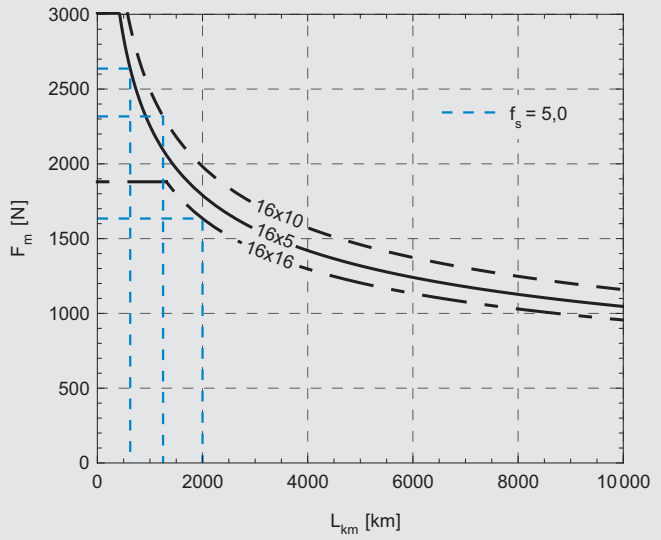

PNCE 50

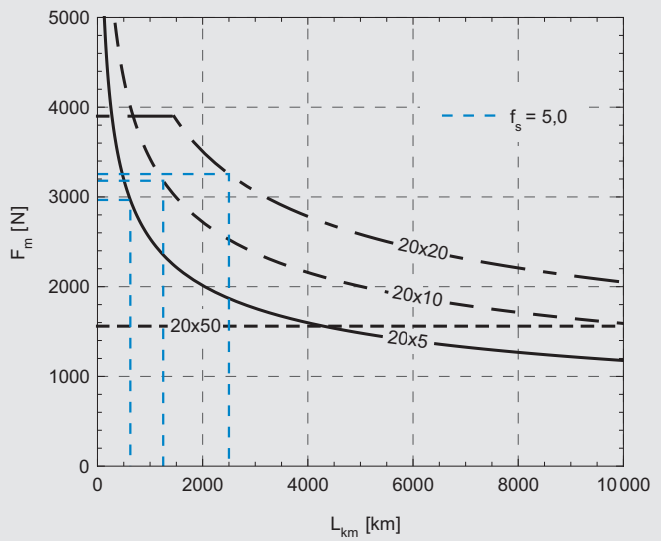

PNCE 63

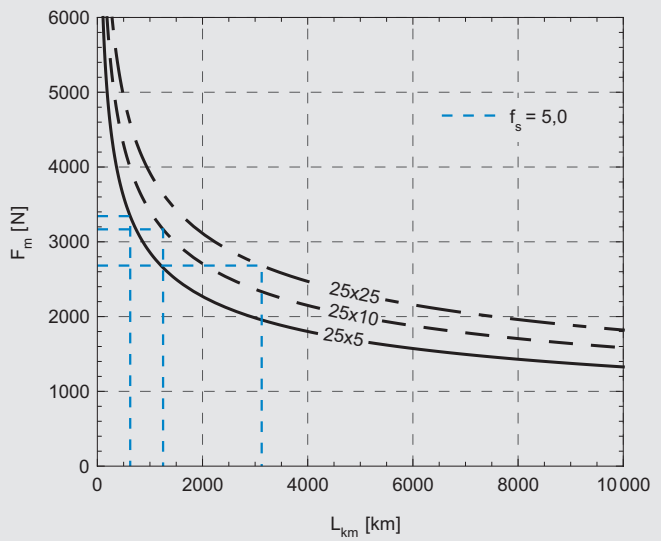

Mean axial load F_m calculation

$$F_m = \sqrt[3]{\frac{|F_1|^3 \times s_1 + |F_2|^3 \times s_2 + \ldots + |F_n|^3 \times s_n}{s_1 + s_2 + \ldots + s_n}}$$

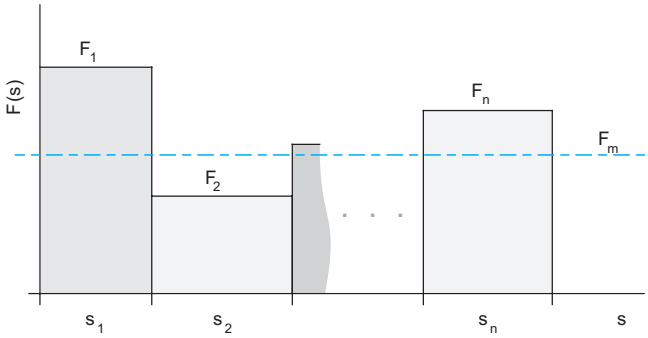

F_m	mean axial load
F_i	i-th axial load of a given loading regime F (s), i∈{1,2,...,n}
s_i	i-th travel path of a given loading regime F (s), i∈{1,2,...,n}

Diagrams presented above are showing the theoretically determined service life of the ball screw drive when the mean axial load F_m at room temperature is taken into consideration.

It should be noted that application conditions may have a significant effect on the service life.

In order to improve the products in this catalogue the specifications are subject to change without notice.

DIMENSIONS

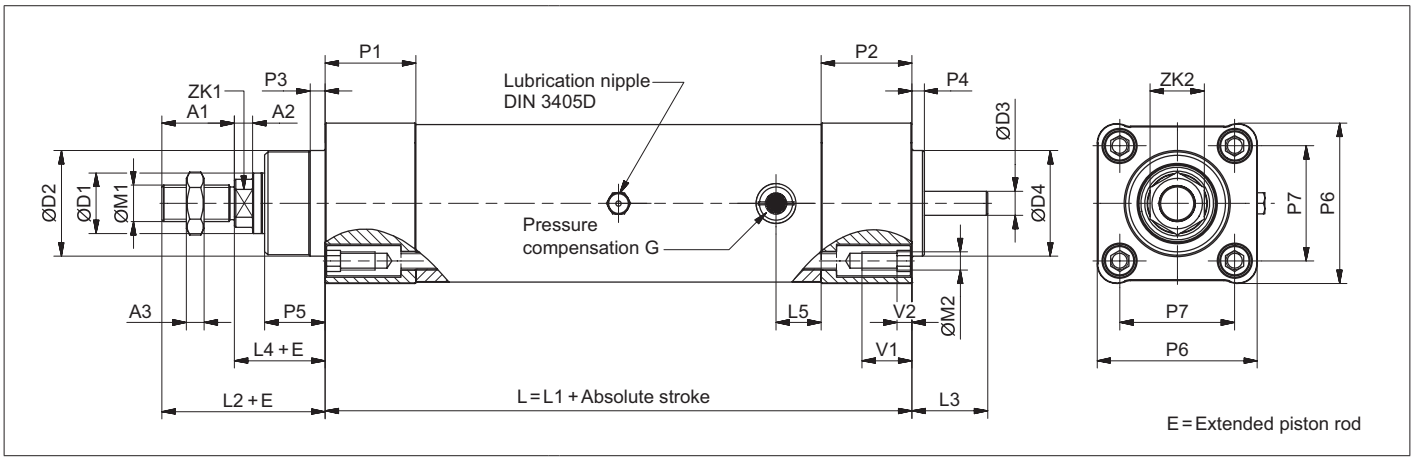

Female thread

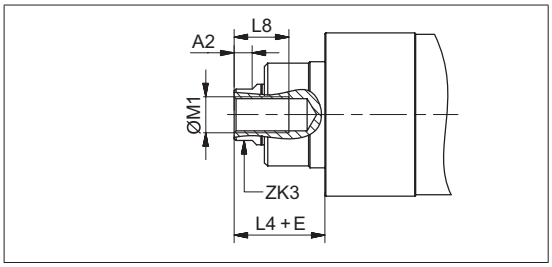

IP65, IP65CR, FI

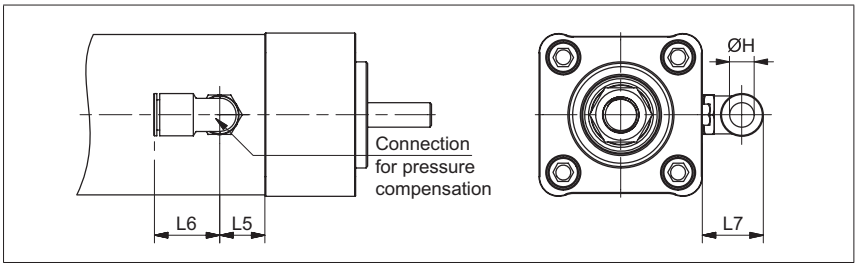

PNCE	L1 (+0,2 / -1,4)	L2	L3	L4 (+1,9 / -0,8)	L5	L6	L7	L8	P1	P2	P3	P4 (±0,1)	P5 (±0,1)	P6	P7	G
Size	[mm]															
32	136	48	21	26	15	22,5	20,0	15	30	30	5	4	18	47	32,5	G 1/8
40	144	54	25	30	15	22,5	20,0	18	30	30	5	4	20	54	38	G 1/8
50	180	69	32	37	15	22,5	20,0	25	36	37	5	4	25	65	46,5	G 1/8
63	171	69	38	37	15	22,5	20,0	25	38	38	5	4	25	75	56,5	G 1/8

PNCE	ØD1 (f8)	ØD2 (d11)	ØD3 (h7)	ØD4 (g7)	ØM1	ØM2	ØH	A1	A2	A3	ZK1	ZK2	ZK3	V1	V2
Size	[mm]														
32	18	30	6	30	M10×1,25	M6	8	22	5	5	10	17	16	16	4,5
40	20	35	8	35	M12×1,25	M6	8	24	6	6	13	19	17	16	4,5
50	25	40	11	40	M16×1,5	M8	8	32	8	8	17	24	22	18	4,5
63	30	45	15	45	M16×1,5	M8	8	32	8	8	17	24	27	18	4,5

Absolute stroke and length of the PNCE definition

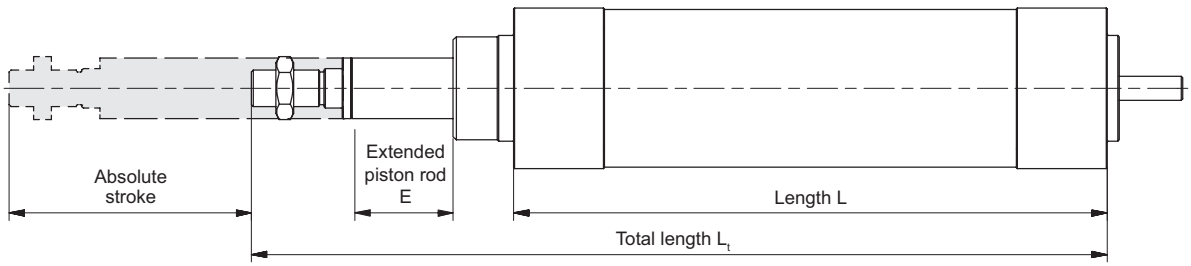

Absolute stroke = Effective stroke + 2 × Safety stroke

L = L1 + Absolute stroke

L_t = L + L2 + E **E_{max} = 200 mm**

Female thread:
L_t = L + L4 + E **E_{max} = 200 mm**

The electric cylinder doesn't include any safety stroke.

E	Extended piston rod	[mm]

ACCESSORIES

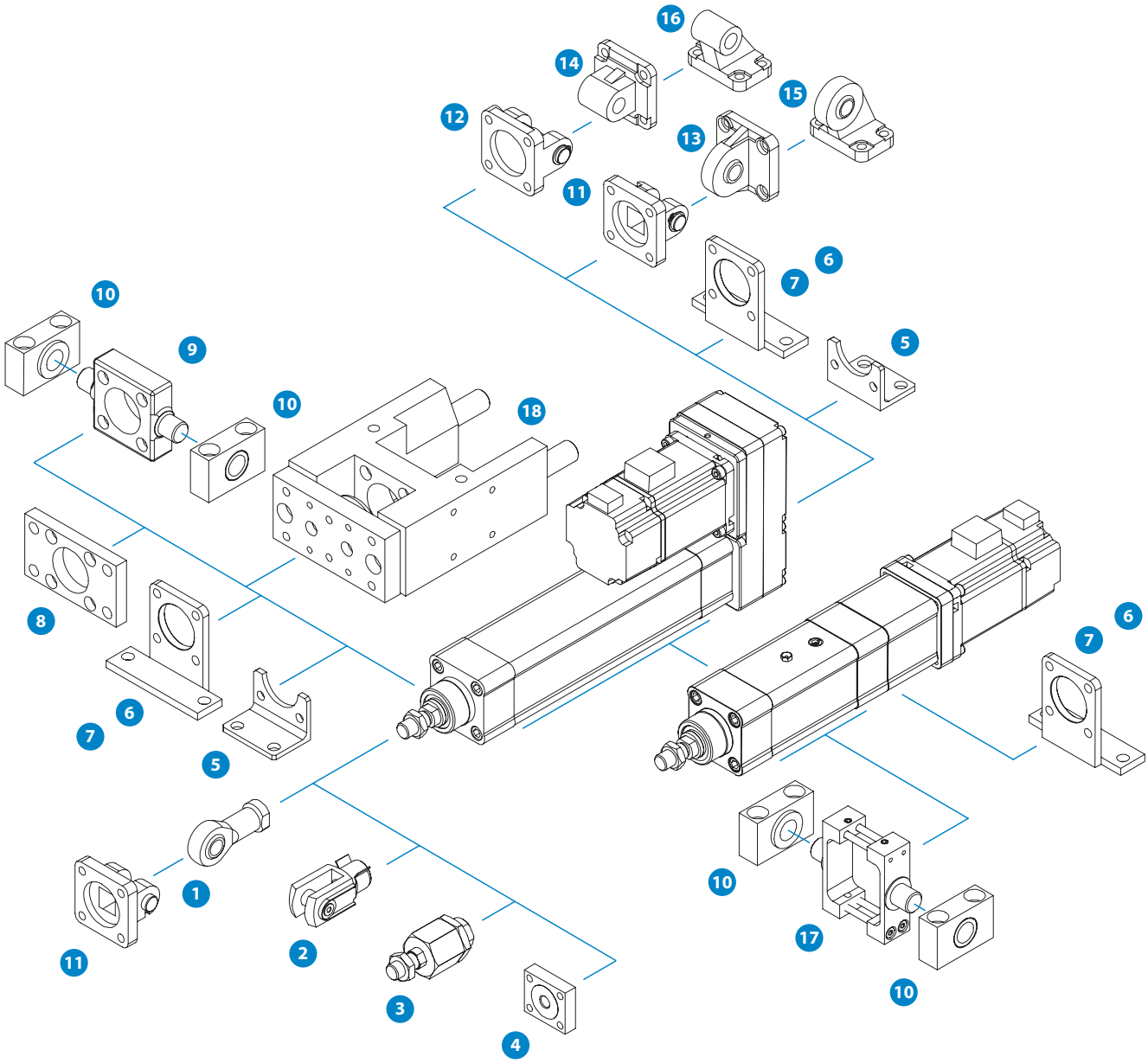

Page	13			14			15			16			17			18		19
Piston rod accessories	1	2	3	4														
Mounting attachment accessories					5	6	7	8	9	10	11	12	13	14	15	16	17	
Guiding unit																		18

CR This sign applies to corrosion resistant products

In order to improve the products in this catalogue the specifications are subject to change without notice.

Piston rod accessories

SGS (Material: galvanized steel, CR - stainless steel AISI 304)

1 CR

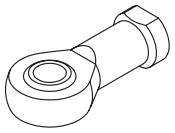

SIMPLE SUPPORT

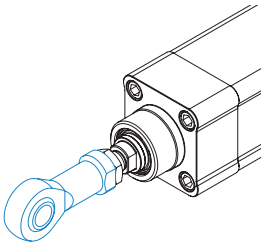

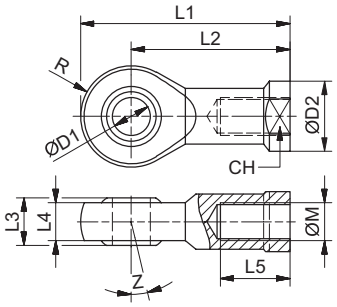

SGS			ØM	L1	L2	L3	L4	L5	ØD1 (H7)	ØD2	R	CH	Z	m	F_{max}
Size	Code	Code CR	[mm]										[°]	[kg]	[N]
32	**9206**	**69550**	M10×1,25	57	43	14	10,5	20	10	19	14	17	13	0,08	F_{PNCE}
40	**9208**	**69551**	M12×1,25	66	50	16	12	22	12	22	16	19	13	0,11	F_{PNCE}
50	**9210**	**50691**	M16×1,5	85	64	21	15	28	16	27	21	22	15	0,22	F_{PNCE}
63	**9210**	**50691**	M16×1,5	85	64	21	15	28	16	27	21	22	15	0,22	F_{PNCE}

SG (Material: galvanized steel, CR - stainless steel AISI 304)

2 CR

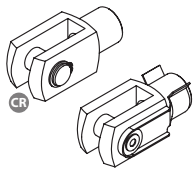

SIMPLE SUPPORT

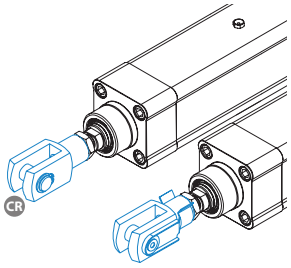

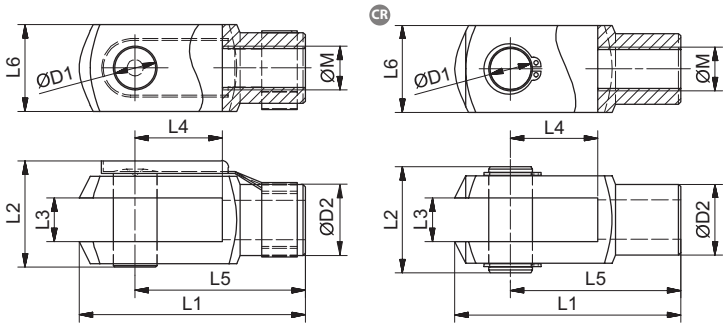

SG			ØM	L1 (±0,5)	L2	L3 (B13)	L4 (±0,5)	L5	L6	ØD1 (h11)	ØD2	m	F_{max}
Size	Code	Code CR	[mm]									[kg]	[N]
32	**9186**	**69547**	M10×1,25	52	26 [25]	10	20	40	20	10	18	0,09	F_{PNCE}
40	**9189**	**69548**	M12×1,25	62	32 [30]	12	24	48	24	12	20	0,15	F_{PNCE}
50	**9191**	**69549**	M16×1,5	83	40 [39]	16	32	64	32	16	26	0,33	F_{PNCE}
63	**9191**	**69549**	M16×1,5	83	40 [39]	16	32	64	32	16	26	0,33	F_{PNCE}

Bracketed values for type CR

FK (Material: galvanized steel)

3

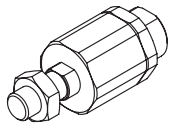

SIMPLE SUPPORT

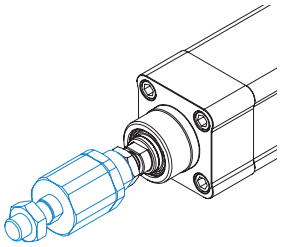

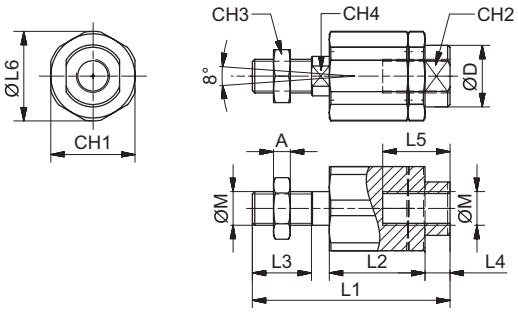

FK		ØM	L1	L2	L3	L4	L5	ØL6	A	ØD	CH1	CH2	CH3	CH4	m	F_{max}
Size	Code	[mm]													[kg]	[N]
32	**5466**	M10×1,25	71	35	20	11	23	32	6	22	30	19	17	12	0,22	F_{PNCE}
40	**5468**	M12×1,25	75	35	24	11	23	32	7	22	30	19	19	12	0,23	5000
50	**5470**	M16×1,5	103	54	32	9	32	45	8	32	41	27	24	20	0,66	10000
63	**5470**	M16×1,5	103	54	32	9	32	45	8	32	41	27	24	20	0,66	10000

KSZ (Material: galvanized steel)

4

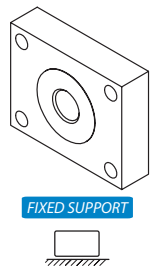

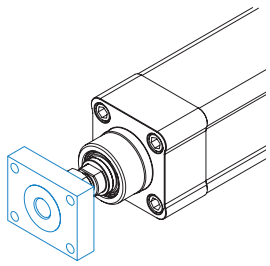

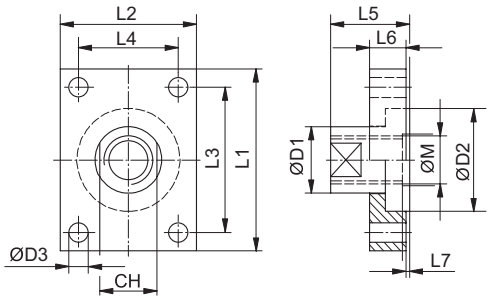

KSZ		ØM	L1	L2	L3	L4	L5	L6	L7	ØD1 (-0,2)	ØD2	ØD3 (H13)	CH	m	F_{max}
Size	Code						[mm]							[kg]	[N]
32	**5229**	**M10×1,25**	40	35	30	25	20	10	0,1	17	26	5,5	15	0,11	F_{PNCE}
40	**5230**	**M12×1,25**	50	40	40	30	22	12	0,1	17	26	5,5	15	0,18	F_{PNCE}
50	**5231**	**M16×1,5**	60	45	48	33	25	12	0,1	22	34	6,6	19	0,25	F_{PNCE}
63	**5231**	**M16×1,5**	60	45	48	33	25	12	0,1	22	34	6,6	19	0,25	F_{PNCE}

Mounting attachments' accessories

HG (Material: galvanized steel, CR - stainless steel AISI 304)

5 CR

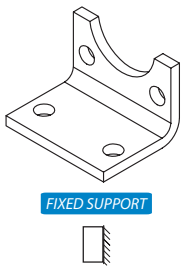

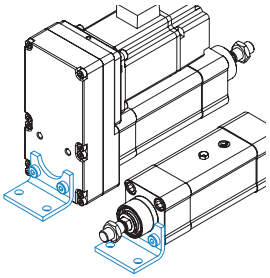

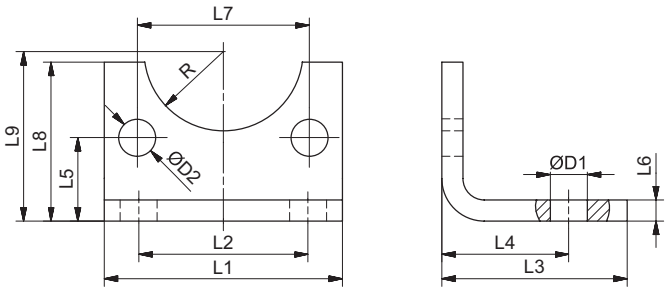

HG					L1	L2	L3	L4	L5	L6	L7	L8	L9	ØD1	ØD2	R	m	F_{max}
Size	Code[1]	Code CR[1]	Code MSD type T1[2]	Code MSD CR type T1[2]					[mm]								[kg]	[N]
32	**69601**	**69605**	**69597**	**69609**	45	32	35	24	15,75	4	32,5	30	32	7	7	15	0,09	F_{PNCE}
40	**69602**	**69606**	**69598**	**69610**	52	36	36	28	17	4	38	30	36	9	7	17,5	0,10	3500
50	**69603**	**69607**	**69599**	**69611**	65	45	47	32	21,75	5	46,5	36	45	9	9	20	0,20	5400
63	**69604**	**69608**	**69600**	**69612**	75	50	45	32	21,75	5	56,5	35	50	9	9	22,5	0,22	6200

HGL (Material: galvanized steel)

6

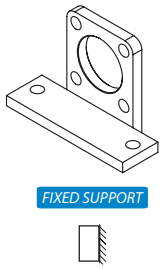

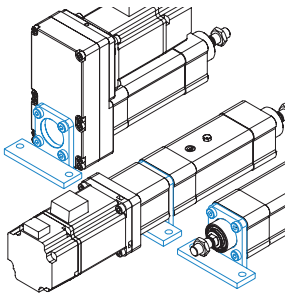

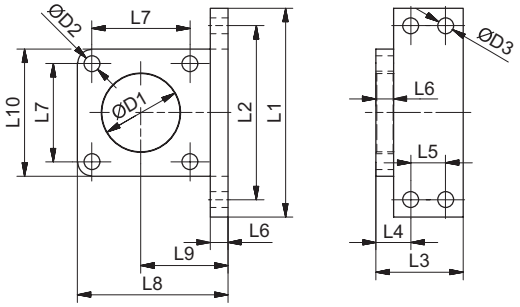

HGL			L1	L2	L3	L4	L5	L6 (±0,5)	L7	L8	L9 (±0,1)	L10	ØD1 (H11)	ØD2 (H13)	ØD3 (H13)	m	F_{max}
Size	Code[1,3]	Code MSD type T1[2]						[mm]								[kg]	[N]
32	**69162**	**69613**	79	65	30	16	-	6	32,5	54,5	32	45	30	7	7	0,19	F_{PNCE}
40	**69163**	**69614**	90	75	30	16	-	6	38	62	36	52	35	7	9	0,23	5100
50	**69164**	**69615**	110	90	35	19	-	10	46,5	76,5	45	63	40	9	9	0,54	11100
63	**69165**	**69616**	120	100	50	20	20	10	56,5	86,5	50	73	45	9	9	0,79	11100

[1] Front cap mounting
[2] Motor side drive type T1 mounting
[3] Motor adapter mounting

In order to improve the products in this catalogue the specifications are subject to change without notice.

HGLL (Material: galvanized steel)

7

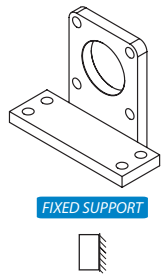

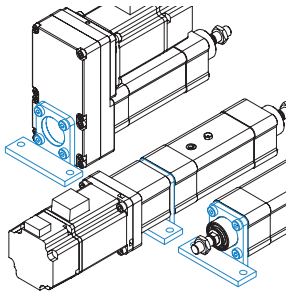

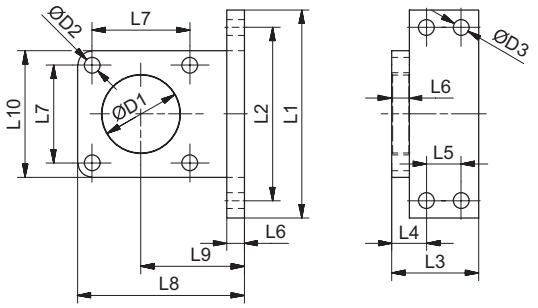

HGLL			L1	L2	L3	L4	L5	L6 (±0,5)	L7	L8	L9 (±0,1)	L10	ØD1 (H11)	ØD2 (H13)	ØD3 (H13)	m	F_{max}
Size	Code[1,3]	Code MSD type T2[2]	[mm]													[kg]	[N]
32	**69429**	**69617**	79	65	30	16	-	6	32,5	57,5	35	45	30	7	7	0,20	F_{PNCE}
40	**69166**	**69618**	90	75	30	16	-	6	38	71	45	52	35	7	9	0,25	2800
50	**69167**	**69619**	110	90	35	19	-	10	46,5	91,5	60	63	40	9	9	0,62	7100
63	**69168**	**69620**	120	100	50	20	20	10	56,5	96,5	60	73	45	9	9	0,85	10100

[1] Front cap mounting
[2] Motor side drive type T2 mounting
[3] Motor adapter mounting

FG (Material: galvanized steel, CR - stainless steel AISI 304)

8 CR

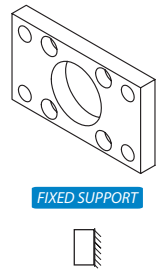

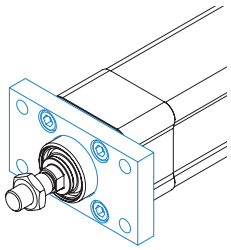

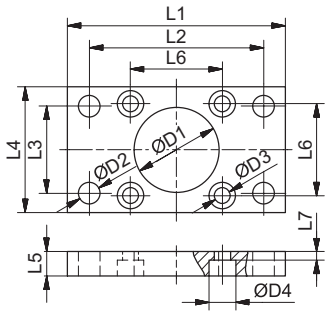

FG			L1	L2	L3	L4	L5	L6	L7	ØD1 (H11)	ØD2 (H13)	ØD3	ØD4	m	F_{max}
Size	Code	Code CR	[mm]											[kg]	[N]
32	**5485**	**69495**	80	64	32	45	10	32,5	5	30	7	6,5	10,5	0,22	F_{PNCE}
40	**5487**	**69497**	90	72	36	52	10	38	5	35	9	6,5	10,5	0,28	F_{PNCE}
50	**5489**	**69498**	110	90	45	65	12	46,5	6,5	40	9	8,5	13,5	0,53	F_{PNCE}
63	**5491**	**69499**	120	100	50	75	12	56,5	6,5	45	9	8,5	13,5	0,68	F_{PNCE}

ZK (Material: galvanized steel)

9

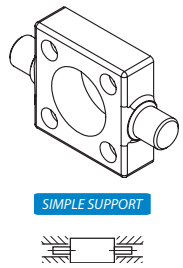

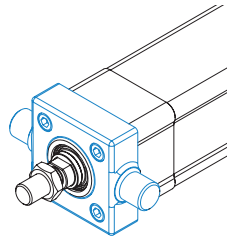

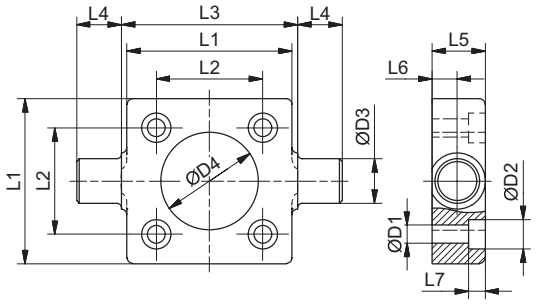

ZK		L1	L2	L3 (h14)	L4 (h14)	L5	L6 (+0,2 / 0)	L7 (+0,5 / 0)	ØD1	ØD2	ØD3 (e9)	ØD4 (H11)	m	F_{max}
Size	Code	[mm]											[kg]	[N]
32	**69075**	46	32.5	50	12	14	6,5	6	6,6	11	12	30	0,17	F_{PNCE}
40	**69083**	59	38	63	16	19	9	6	6,6	11	16	35	0,43	F_{PNCE}
50	**69084**	69	46.5	75	16	19	9	8	9	15	16	40	0,58	F_{PNCE}
63	**69085**	84	56.5	90	20	24	11,5	8	9	15	20	45	1,12	F_{PNCE}

LZ (Material: galvanized steel)

set contains 2 pcs

10

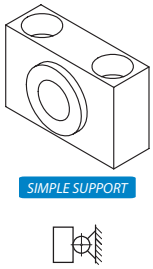

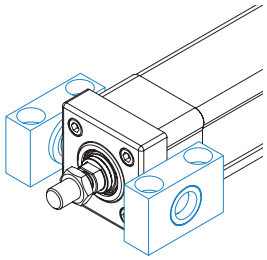

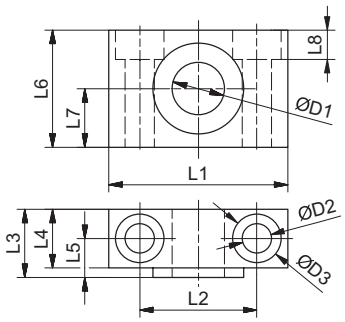

LZ		L1	L2 (±0,2)	L3	L4	L5	L6	L7 (±0,1)	L8 (±0,5)	ØD1 (F7)	ØD2 (H13)	ØD3 (H13)	m	F_{max}
Size	Code	[mm]											[kg]	[N]
32	**8139**	46	32	18	15	10,5	30	15	7	12	6,6	11	0,10	F_{PNCE}
40	**8141**	55	36	21	18	12	36	18	9	16	9	15	0,15	F_{PNCE}
50	**8141**	55	36	21	18	12	36	18	9	16	9	15	0,15	9200
63	**8143**	65	42	23	20	13	40	20	11	20	11	18	0,23	12800

SGN (Material: aluminium, CR - stainless steel AISI 316)

11 CR

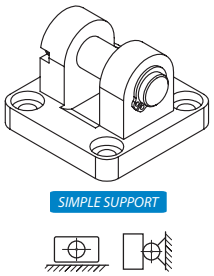

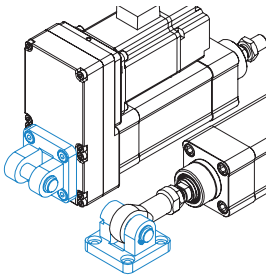

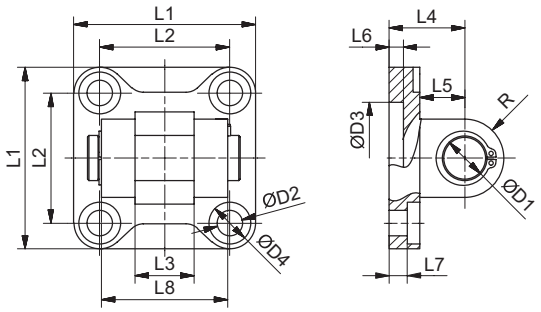

SGN					L1 (±0,5)	L2	L3	L4 (±0,2)	L5	L6	L7	L8	ØD1 (f7)	ØD2 (H13)	ØD3 (H11)	ØD4 (H13)	R	m	F_{max}
Size	Code[1]	Code CR[1]	Code MSD[2]	Code MSD CR[2]	[mm]													[kg]	[N]
32	**9200**	**69538**	**69621**	**69625**	45	32,5	14	22	13 [12]	5	5,5	34	10	6,6	30	11	10	0,10 [0,20]	F_{PNCE}
40	**9201**	**69539**	**69622**	**69626**	52 [55]	38	16	25	16 [15]	5	5,5	40	12	6,6	35	11	12	0,14 [0,30]	5700
50	**9202**	**69540**	**69623**	**69627**	65	46,5	21	27	16 [17]	5	6,5	45	16	9	40	15	12	0,26 [0,48]	7600
63	**9203**	**69541**	**69624**	**69628**	75	56,5	21	32	21 [20]	5	6,5	51	16	9	45	15	16	0,35 [0,70]	9600

Bracketed values for type CR

SBG (Material: aluminium, CR - stainless steel AISI 304)

12 CR

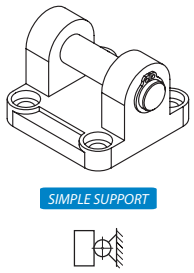

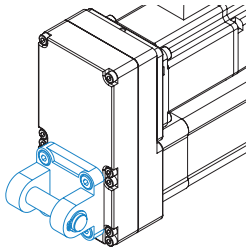

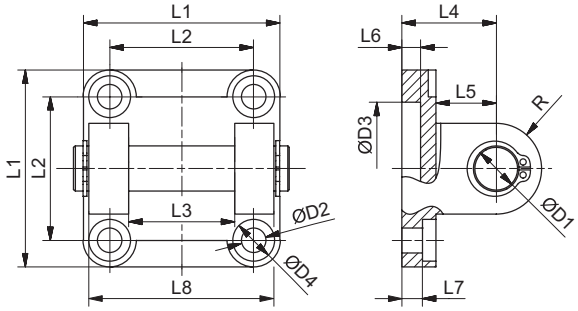

SBG			L1	L2	L3	L4 (±0,2)	L5	L6	L7	L8	ØD1 (e8)	ØD2 (H13)	ØD3 (H11)	ØD4 (H13)	R	m	F_{max}
Size	Code MSD[2]	Code MSD CR[2]	[mm]													[kg]	[N]
32	**69629**	**69633**	45	32,5	26	22	13	5	5,5	45	10	6,6	30	11	10	0,11 [0,20]	F_{PNCE}
40	**69630**	**69634**	52	38	28	25	16	5	5,5	52	12	6,6	35	11	12	0,18 [0,31]	F_{PNCE}
50	**69631**	**69635**	65	46,5	32	27	16	5	6,5	60	12	9	40	15	12	0,23 [0,45]	8000
63	**69632**	**69636**	75	56,5	40	32	21	5	6,5	70	16	9	45	15	16	0,36 [0,70]	11000

Bracketed values for type CR

[1] Front cap mounting
[2] Motor side drive mounting

In order to improve the products in this catalogue the specifications are subject to change without notice.

SSG (Material: aluminium, CR - stainless steel AISI 316)

13 CR

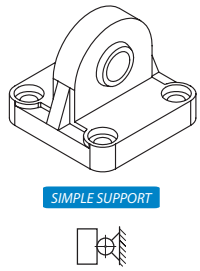

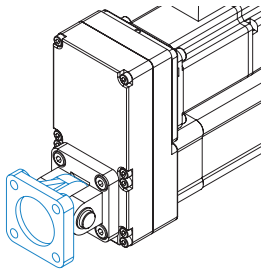

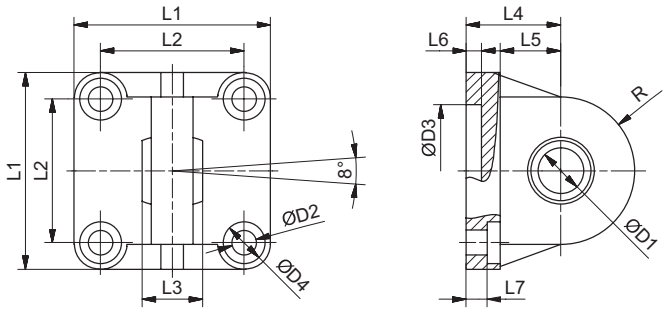

SSG			L1	L2	L3	L4 (JS 15)	L5	L6	L7 (±0,5)	ØD1 (H7)	ØD2 (H13)	ØD3 (H11)	ØD4 (H13)	R	m	F_{max}
Size	Code	Code CR	[mm]												[kg]	[N]
32	**9292**	**69542**	45	32,5	14	22	12	5	5,5	10	6,6	30	11	16 [15]	0,09 [0,18]	F_{PNCE}
40	**9294**	**69544**	52 [55]	38	16	25	15	5	5,5	12	6,6	35	11	18	0,13 [0,29]	F_{PNCE}
50	**9296**	**50709**	65	46,5	21	27	15 [17]	5	6,5	16	9	40	15	21	0,24 [0,42]	14400
63	**9298**	**69546**	75	56,5	21	32	20	5	6,5	16	9	45	15	23	0,30 [0,66]	14400

Bracketed values for type CR

SGL (Material: aluminium, CR - stainless steel AISI 304)

14 CR

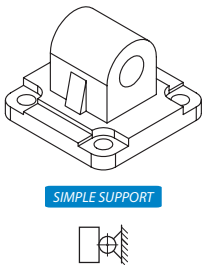

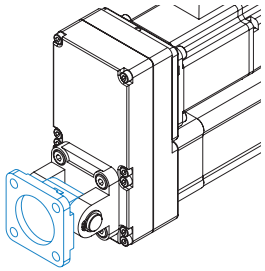

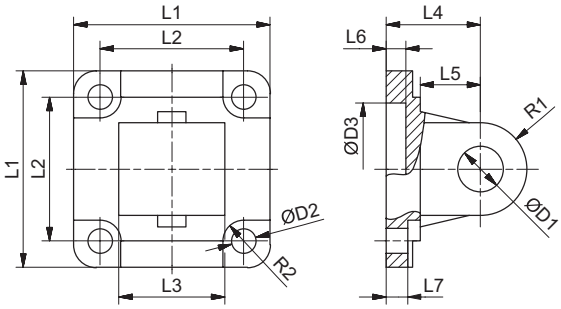

SGL			L1	L2	L3	L4 (±0,2)	L5	L6	L7	ØD1 (H9)	ØD2 (H13)	ØD3 (H11)	R1	R2	m	F_{max}
Size	Code	Code CR	[mm]												[kg]	[N]
32	**9176**	**69500**	45	32,5	26	22	13	5	5,5	10	6,6	30	10	5,5	0,08 [0,21]	F_{PNCE}
40	**9178**	**69501**	52	38	28	25	16	5	5,5	12	6,6	35	12	5,5	0,11 [0,30]	F_{PNCE}
50	**9180**	**69502**	65	46,5	32	27	16	5	6,5	12	9	40	12	7,5	0,18 [0,43]	9200
63	**9182**	**69503**	75	56,5	40	32	21	5	6,5	16	9	45	16	7,5	0,27 [0,74]	14300

Bracketed values for type CR

LSG (Material: size 32...50 - galvanized steel, size 63 - graphite cast iron, CR - stainless steel AISI 316)

15 CR

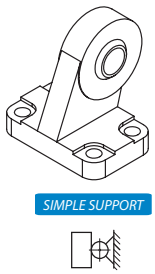

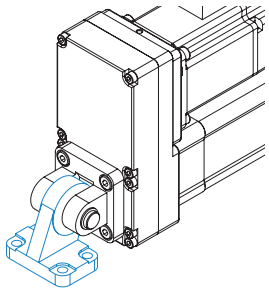

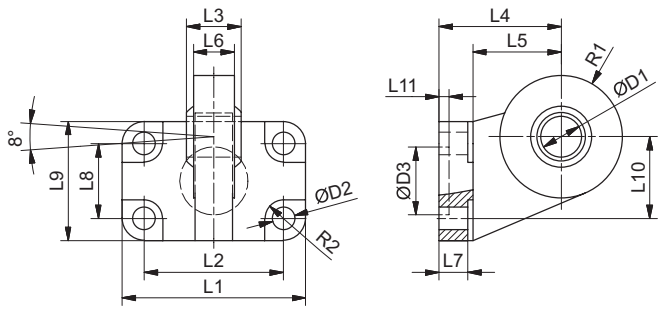

LSG			L1	L2	L3	L4 (JS 15)	L5	L6	L7	L8	L9	L10 (JS 15)	L11	ØD1 (H7)	ØD2 (H13)	ØD3 (H13)	R1	R2 (H13)	m	F_{max}
Size	Code	Code CR	[mm]																[kg]	[N]
32	**8129**	**69071**	51	38	14	32	22	10,5	8,5	18	31	21	3	10	6,6	20	15	5,5	0,18	F_{PNCE}
40	**8130**	**69072**	54	41	16	36	26	12	8,5	22	35	24	3	12	6,6	20	18	5,5	0,27	F_{PNCE}
50	**8131**	**69073**	65	50	21	45	33	15	10,5	30	45	33	3	16	9	20	20	7,5	0,46	F_{PNCE}
63	**8132**	**69069**	67	52	21	50	38	15	10,5	35	50	37	3	16	9	20	23	7,5	0,55	F_{PNCE}

LG (Material: aluminium, CR - stainless steel AISI 304)

16 CR

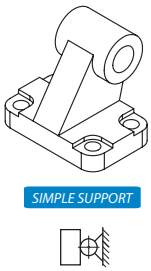

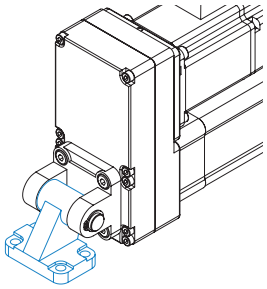

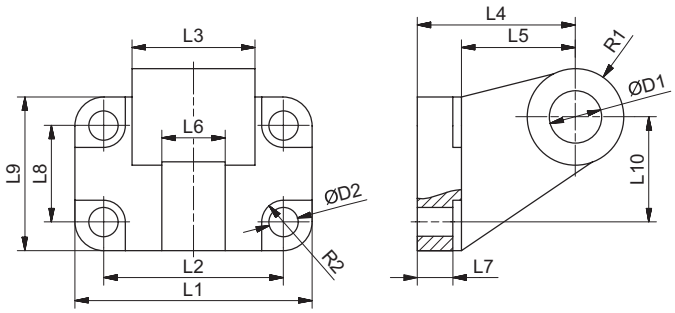

LG			L1	L2	L3	L4	L5	L6	L7	L8	L9	L10	ØD1 (H9)	ØD2 (H13)	R1	R2	m	F_{max}
Size	Code	Code CR	[mm]														[kg]	[N]
32	**8119**	**69505**	51	38	26	32	24	10	6,4	18	31	21	10	6,6	10	5,5	0,06 [0,16]	F_{PNCE}
40	**8120**	**69506**	54	41	28	36	26	15	8,4	22	35	24	12	6,6	11	5,5	0,14 [0,24]	F_{PNCE}
50	**8121**	**69507**	65	50	32	45	33	16	10,4	30	45	33	12	9	13	7,5	0,14 [0,42]	9200
63	**8122**	**69508**	67	52	40	50	36	16	12,4	35	50	37	16	9	15	7,5	0,20 [0,53]	15300

Bracketed values for type CR

ZKCE (Material: galvanized steel)

17

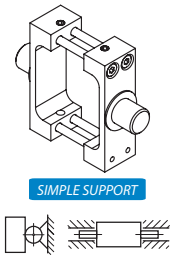

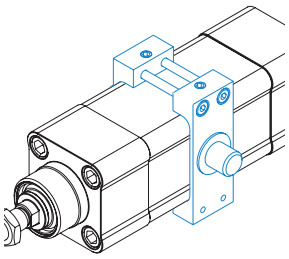

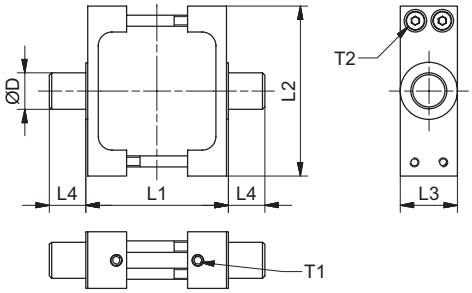

ZKCE		L1	L2	L3	L4	ØD	T1	T2	m	F_{max}
Size	Code	[mm]					[Nm]		[kg]	[N]
32	**69148**	50	65	25	12	12	5	3	0,15	F_{PNCE}
40	**69149**	63	75	25	16	16	7	5	0,30	F_{PNCE}
50	**69150**	75	95	30	16	16	7	5	0,52	8500
63	**69151**	90	105	30	20	20	7	5	0,64	8500

In order to improve the products in this catalogue the specifications are subject to change without notice.

Guiding unit

GUH (Material: body - aluminium, guides - steel)

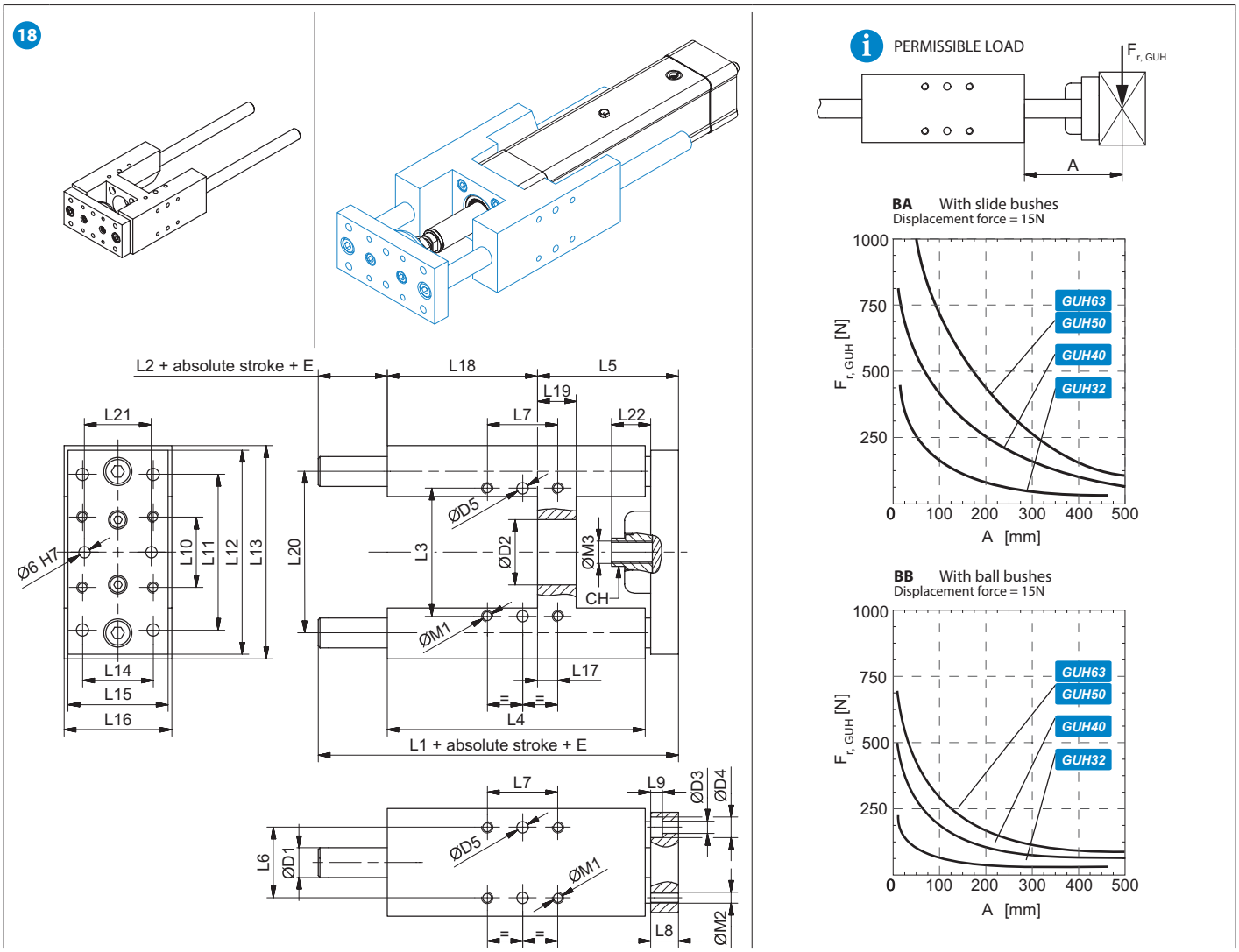

HOW TO ORDER

GUH - 40 - 200 - BB

Guiding unit

Size:
• 32 • 40 • 50 • 63

Absolute stroke + Extended piston rod E [mm]

Option: • BA: with slide bushes
• BB: with ball bushes

Absolute stroke + extended piston rod E = max. 500mm

PNCE	Mass of GUH	Moved mass of GUH*
	m_{GUH} [kg]	$M_{m,GUH}$ [kg]
32	1,57 + 0,0017 × (Abs. stroke + E)	0,86 + 0,0017 × (Abs. stroke + E)
40	2,48 + 0,0031 × (Abs. stroke + E)	1,32 + 0,0031 × (Abs. stroke + E)
50	4,18 + 0,0047 × (Abs. stroke + E)	2,47 + 0,0047 × (Abs. stroke + E)
63	5,54 + 0,0047 × (Abs. stroke + E)	2,90 + 0,0047 × (Abs. stroke + E)

* The moved mass of GUH is already considered in the equation for calculating the mass of GUH m_{GUH}

E	Extended piston rod	[mm]

PNCE	L1	L2	L3	L4	L5	L6	L7	L8	L9	L10	L11	L12	L13	L14	L15	L16
Size	[mm]															
32	177	37	61	125	64	32,5	32,5	12	6,5	32,5	78	90	97	32,5	45	49
40	192	37	69	139	74	38	38	15	6,5	38	84	110	115	38	54	58
50	205	38	85	148	89	46,5	46,5	15	8,5	46,5	100	130	137	46,5	63	69
63	237	38	100	182	88	56,5	56,5	15	8,5	56,5	105	145	152	56,5	79	85

PNCE	L17	L18	L19	L20	L21	L22	ØD1	ØD2	ØD3	ØD4	ØD5 × l (H7)	ØM1	ØM2	ØM3	CH
Size															
32	4,3	76	17	74	31	18	12	30	6,5	10,5	6×6	M6×12	M6	M10×1,25	15
40	11	81	21	87	36	21	16	35	6,5	10,5	6×10	M6×12	M6	M12×1,25	15
50	18,5	78	26	104	45	24	20	40	8,5	13,5	6×10	M8×16	M8	M16×1,5	22
63	15,3	111	26	119	45	24	20	45	8,5	13,5	6×10	M8×16	M8	M16×1,5	22

Blanking screws (Material: stainless steel AISI 304)

set contains 4 pcs

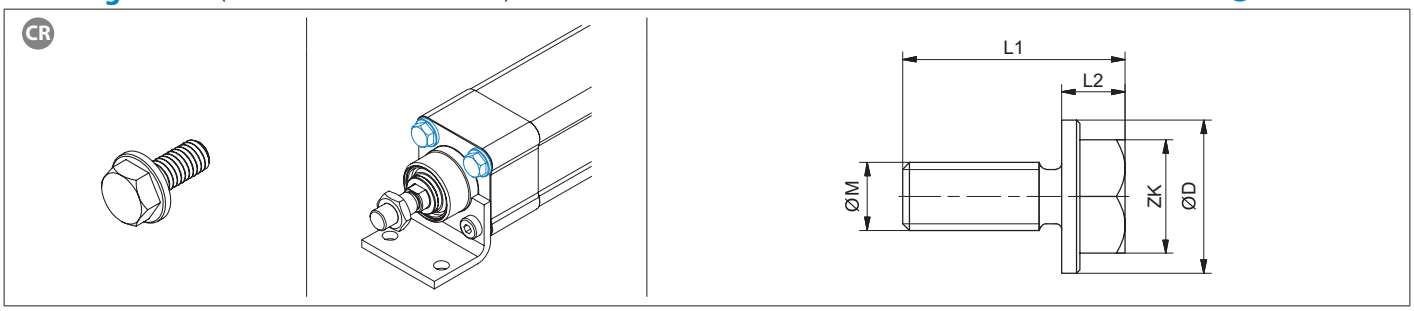

Blanking screw		ØM	L1	L2	ØD	ZK
Tip / Type	Code	[mm]				
M6	**69156**	M6	19,5	5,5	12,8	10
M8	**69157**	M8	24	8	17	13

LUBRICATION POSITION

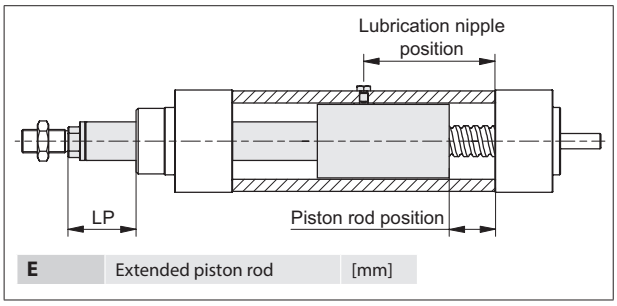

PNCE	Ball screw	Lubrication nipple position	Piston rod position	LP
	d×l [mm]	[mm]	[mm]	[mm]
32	12×5, 12×0	Abs. stroke / 2 + 38,0	Abs. stroke / 2 - 9,0	Abs. stroke / 2 + E - 1,0
40	16×5, 16×10, 16×16	Abs. stroke / 2 + 42,0	Abs. stroke / 2 - 10,5	Abs. stroke / 2 + E - 0,5
50	20×5, 20×10, 20×20	Abs. stroke / 2 + 53,5	Abs. stroke / 2 - 22,0	Abs. stroke / 2 + E - 10,0
	20×50		Abs. stroke / 2 - 5,0	Abs. stroke / 2 + E + 7,0
63	25×5, 25×10	Abs. stroke / 2 + 47,5	Abs. stroke / 2 - 13,5	Abs. stroke / 2 + E - 1,5
	25×25		Abs. stroke / 2 - 4,0	Abs. stroke / 2 + E + 8,0

The lubrication nipple on the aluminum profile of the electric cylinder allows easy re-lubrication of the ball screw.
To achieve the lubricationing position the piston rod must be moved from the end position into position (Piston rod position) shown in the table above. The same position is achieved when the distance LP is obtained.

MOTOR ADAPTER WITH COUPLING

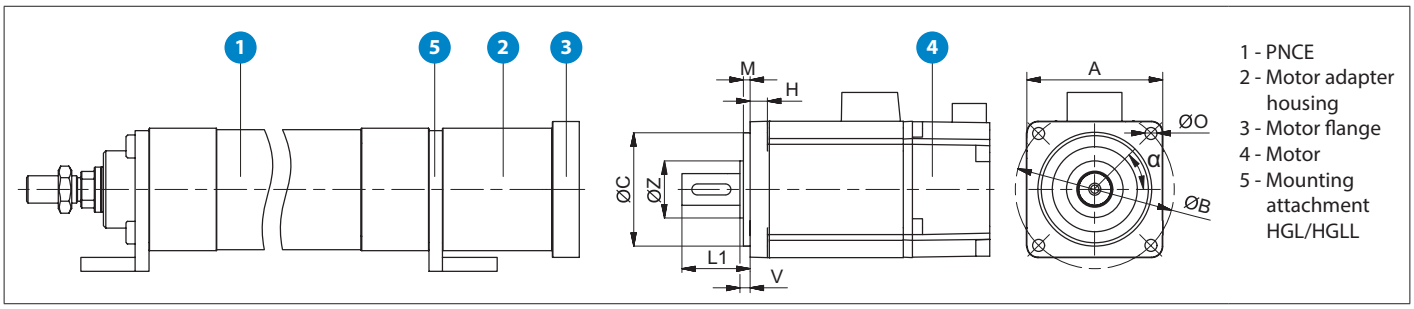

1 - PNCE
2 - Motor adapter housing
3 - Motor flange
4 - Motor
5 - Mounting attachment HGL/HGLL

HOW TO ORDER

VK - PNCE40 - EKL10 - 1 - S - 60 - 70 - 50 - 3 - 30 - 7,5 - 5,5 - 4,6 - 29 - 45

Motor adapter

PNCE series

Coupling type
According to the customers's specification (page 22)

Mounting attachment HGL/HGLL:
- 0: without
- 1: with

Versions:
- S: Standard
- IP65CR: IP65CR protection

(IP65CR version is also suitable for some applications in the food industry. More information on request.)

A	ØB	ØC	M	L1	H	ØO	V	ØZ	α
			Motor dimensions [mm]						[°]

In order to improve the products in this catalogue the specifications are subject to change without notice.

MOTOR SIDE DRIVE WITH A TIMING BELT

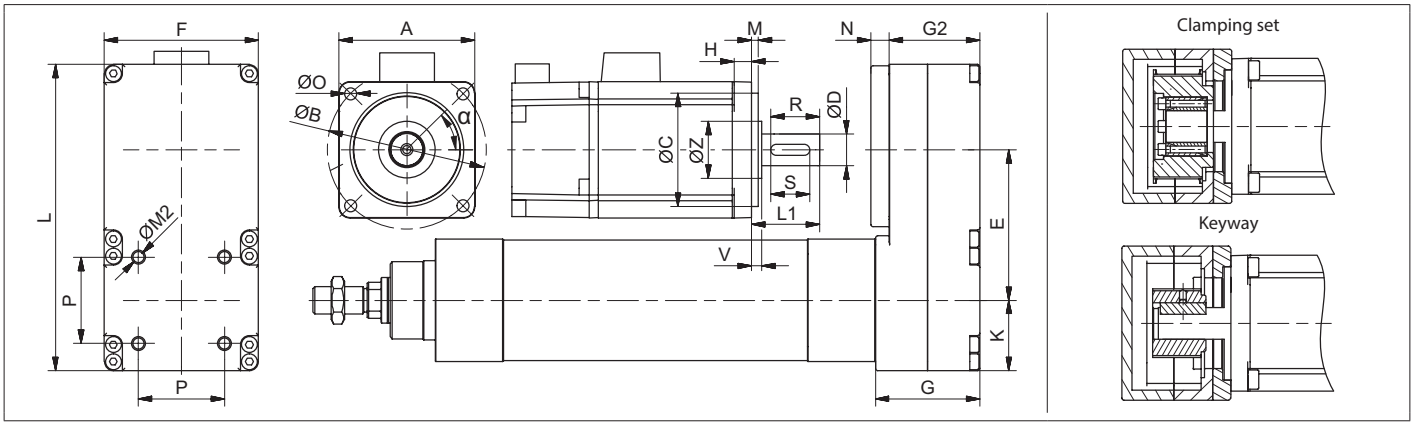

HOW TO ORDER

MSD - PNCE40 - T1 - 1 - S - 60 - 70 - 50 - 3 - 30 - 14 - 7,5 - 5,5 - 20 - 20 - 4,6 - 29 - 45

- **Motor side drive**
- **PNCE series**
- **Type**
- **Gear ratio**
- **Versions:**
  - S: Standard
  - IP65CR: IP65CR protection
- **A, ØB, ØC, M, L1, ØD, H, ØO, R, S, V, ØZ** — **Motor dimensions [mm]**
- **α** — [°]

Technical data

PNCE	Type	Gear ratio	Max. drive torque	Maximum radial load on shaft *	No load torque	Mass moment of inertia	Mass	Motor size limits [mm]							
								A	ØB	L1			ØC	ØD	
		i	$M_{p,MSD}$ [Nm]	$F_{r,MSD}$ [N]	$M_{0,MSD}$ [Nm]	J_{MSD} [10^{-6} kg m²]	m_{MSD} [kg]	max	max	min		max	max	max	
										Clamping set	Keyway			Clamping set	Keyway
32	T1	1	1,4	40	0,10	65	0,85	81	80	**	25	38	50	16	-
		1,5	0,9	40	0,07	34	0,72	80						10	14
40	T1	1	3	80	0,10	82	0,92	74	80		25	42	50	16	-
		1,5	2	80	0,07	46	0,79	73						10	14
	T2	1	4	80	0,27	281	1,66	109	110		30	52	75	28	-
		1,5	2,6	80	0,18	195	1,39	107						16	24
50	T1	1	9	170	0,27	356	1,76	98	110		30	52	75	28	-
		1,5	6	170	0,18	240	1,48	96						16	24
	T2	1	9	205	0,30	1002	3,63	173	140		35	62	100	35	-
		2	4,5	205	0,15	574	3,06	184					95	15	22
63	T1	1	21	500	0,34	1115	3,72	163	140		35	62	100	35	-
		2	8,9	400	0,17	631	3,10	174					95	15	22

* This is the load which is linearly dependent on the maximum drive torque $M_{p,MSD}$ and is generated by the correct pretension of the belt. This load needs to be reduced in accordance with the capabilities of the motor.
** Minimum dimension L1 depends on the size of particular clamping set. Values can be found on the upper table on page 22.

Dimensions

PNCE	Type	Gear ratio	E	F	G	G2	N ***	K	L	P	ØM2
		i	[mm]								
32	T1	1	65	68	42	36	8	31	135	32,5	M6×8,5
		1,5	64,5								
40	T1	1	65	68	46	40	8	31	135	38	M6×8,5
		1,5	64,5								
	T2	1	82,5	89	57	51	8	42	174	38	M6×8,5
		1,5	81,7								
50	T1	1	82,5	89	57	51	8	42	174	46,5	M8×9
		1,5	81,7								
	T2	1	120	116	66	60	10	49,5	239	46,5	M8×9
		2	125,8								
63	T1	1	120	116	66	60	10	49,5	239	56,5	M8×10
		2	125,8								

*** This is a standard value. It could differ depending to the motor dimensions M and L1.

Minimum dimension L1 [mm] depends on the motor shafts diameter ØD

PNCE	Type	Gear ratio	ØD [mm]																							
		i	6	6,35	7	8	9	9,53	10	11	12	14	15	16	17	18	19	20	22	24	25	25,4	28	30	32	35
32	T1	1	18	18	18	18	20	20	20	23	23	27	27	27	-	-	-	-	-	-	-	-	-	-	-	-
		1,5	18	18	18	18	20	20	20	-	-	-	-	-	-	-	-	-	-	-	-	-	-	-	-	-
40	T1	1	18	18	18	18	20	20	20	23	23	27	27	27	-	-	-	-	-	-	-	-	-	-	-	-
		1,5	18	18	18	18	20	20	20	-	-	-	-	-	-	-	-	-	-	-	-	-	-	-	-	-
40	T2	1	18	18	18	18	20	20	20	23	23	27	27	27	31	31	31	31	31	36	36	36	36	-	-	-
		1,5	18	18	18	18	20	20	20	23	23	27	27	27	-	-	-	-	-	-	-	-	-	-	-	-
50	T1	1	-	-	-	18	20	20	20	23	23	27	27	27	31	31	31	31	31	36	36	36	36	-	-	-
		1,5	-	-	18	18	20	20	20	23	23	27	27	27	-	-	-	-	-	-	-	-	-	-	-	-
50	T2	1	-	-	-	23	25	25	25	25	25	29	29	29	33	33	33	33	33	38	38	38	38	38	38	41
		2	23	23	23	23	25	25	25	25	25	29	29	-	-	-	-	-	-	-	-	-	-	-	-	-
63	T1	1	-	-	-	-	-	-	-	-	-	29	29	29	33	33	33	33	33	38	38	38	38	38	38	41
		2	-	-	-	23	25	25	25	25	25	29	29	-	-	-	-	-	-	-	-	-	-	-	-	-

COUPLINGS

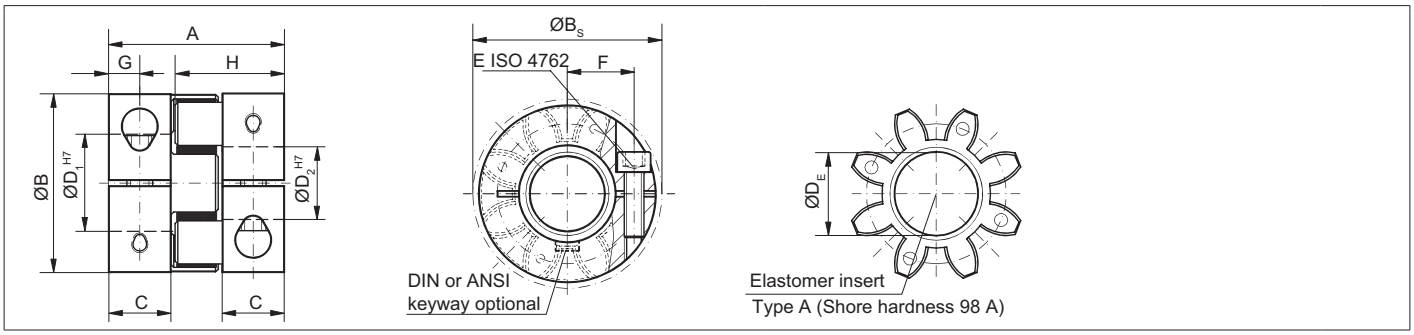

EKL			5	10	20	60
Rated torque	[Nm]	T_{KN}	9	12.5	17	60
Max. torque*	[Nm]	T_{MAX}	18	25	34	120
Overall length	[mm]	A	26	32	50	58
Outside diameter	[mm]	B	25	32	42	56
Outside diameter with screw head	[mm]	B_S	25	32	44,5	57
Mounting length	[mm]	C	8	10,3	17	20
Inside diameter range H7	[mm]	$D_{1/2}$	4-12,7	4-16	8-25	12-32
Inside diameter of the elastomer	[mm]	D_E	10,2	14,2	19,2	26,2
Clamping screw (ISO 4752)		E	M3	M4	M5	M6
Tightening torque of the clamping screw	[Nm]		2	4	8	15
Distance between the centres	[mm]	F	8	10,5	15,5	21
Distance	[mm]	G	4	5	8,5	10
Hub length	[mm]	H	16,7	20,7	31	36
Moment of inertia per hub	[10^{-3}kgm²]	$J_{1/2}$	0,002	0,003	0,01	0,04
Approximate weight	[kg]		0,02	0,05	0,12	0,3
Speed standard	[min^{-1}]		15000	13000	12500	11000

* The maximum transmittable torque of the clamping hub depends on the bore diameter and is limited to the size of the PNCE.

Maximum transmittable and drive torque $M_{p,C}$ [Nm] depends on the bore diameter

EKL	Ø4	Ø5	Ø8	Ø16	Ø19	Ø25	Ø30	Ø32
5	1,5	2	8	-	-	-	-	-
10	-	4	12	32	-	-	-	-
20	-	-	20	35	45	60	-	-
60	-	-	-	50	80	100	110	120

Maximum transmittable and drive torque $M_{p,C}$ [Nm] limited to the size of the PNCE

EKL	PNCE 32	PNCE 40	PNCE 50	PNCE 63
5	2,2	-	-	-
10	2,2	5,3	13,9	-
20	-	-	13,9	17
60	-	-	-	35,1

HOW TO ORDER

COUPLING - EKL10 - A - F8 - F14PFN

Coupling

Coupling type/size:
• 5 • 10 • 20 • 60

Elastomer insert type:
• A

Hole diameter

Option:
• PFN: with keyway
• Leave blank: without keyway

In order to improve the products in this catalogue the specifications are subject to change without notice.

MAGNETIC FIELD SENSORS

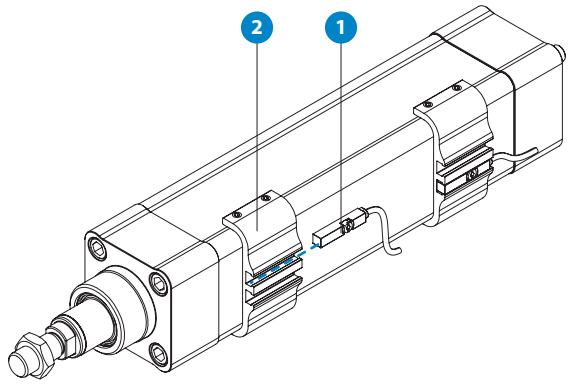

1 - Magnetic field sensor
2 - Sensor holder

Mounting of the Magnetic field sensor on PNCE requires a HPNCE sensor holder.

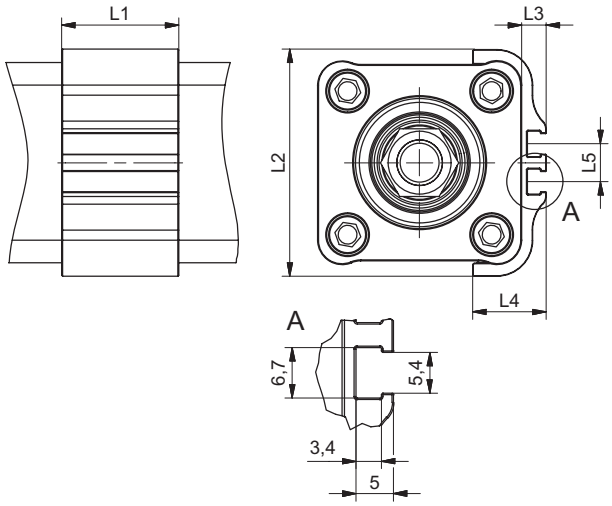

PNCE	L1	L2	L3	L4	L5
	[mm]				
32	30	53	6,5	19,5	10
40	30	60	6,5	19,5	10
50	30	71	6,5	22,5	10
63	30	81	6,5	22,5	10

SMT-65TP-K NO / NC

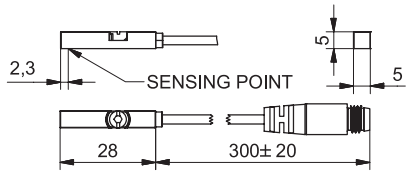

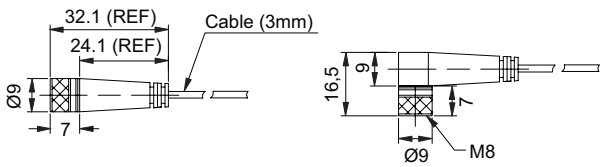

Code	Type	Compatibility	
68997	HPNCE sensor holder	PNCE 32	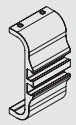
68998		PNCE 40	
68999		PNCE 50	
69000		PNCE 63	
74073	SMT-65TP-K NC	PNCE series	
74074	SMT-65TP-K NO	PNCE series	
8146	Extension cable length 2m - Straight connector		
8147	Extension cable length 5m - Straight connector		
9017	Extension cable length 2m - Angled connector		
9019	Extension cable length 5m - Angled connector		

TECHNICAL DATA	SMT-65TP-K NC	SMT-65TP-K NO
Sensor Type	GMR sensor	GMR sensor
Switching function	NC	NO
Output	PNP	PNP
Operating voltage	10 ~ 28 V DC	10 ~ 28 V DC
Switching Current	200 mA max.	200 mA max.
Power rating	5,5 W max.	5,5 W max.
Voltage Drop	1,5 V / 200mA max.	1,5 V / 200mA max.
Current Consumption	10mA / 24 V max.	10mA / 24 V max.
Switching Frequency	1000 Hz	1000 Hz
Ambient temperature	-10 ~ +70°C	-10 ~ +70°C
Shock/Vibration	50 G / 9 G	50 G / 9 G
Protection class	IP67	IP67
LED indicator	Yellow	Yellow
Electrical connection	M8, 3-pin	M8, 3-pin
Cable material length	PU - 0,3m	PU - 0,3m
Extension cable	Energy chain compliant	Energy chain compliant

LOAD TORQUE CALCULATION AND DETERMINATION OF MAXIMUM AXIAL LOAD ON THE PNCE CYLINDER

Load torque

The load torque is a function of an applied axial load on the PNCE and can be calculated as follows:

$$M_{load} = \frac{F_{axial} \times l}{2000 \times \pi \times \eta}$$

When the motor side drive (MSD) is taken into consideration:

$$M_{load} = \frac{F_{axial} \times l}{2000 \times \pi \times \eta \times i}$$

M_{load}	Load torque	[Nm]
F_{axial}	Applied axial load on the PNCE	[N]
l	Ball screw lead	[mm]
η	Mechanical efficiency ≈ 0,9	[-]
i	Gear ratio	[-]

It should be noted that the load torque M_{load} must never exceed the maximum drive torque M_p.

Maximum axial load on the PNCE

Application conditions example:
- PNCE 40 with ball screw 16×5
- Absolute stroke = 500 mm
- Extended piston rod E = 0 mm
- Travel speed v_{max} = 0,2 m/s
- Using motor side drive type T1 with a gear ratio i = 1,5
- Mounting: simple – simple mount with SGS and SBG attachment

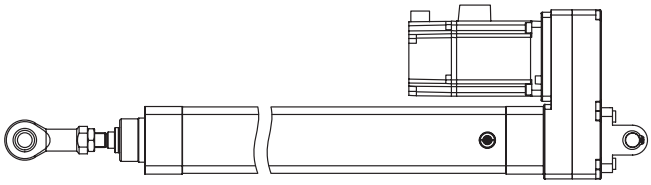

Using the diagram of the maximum axial loading as a function of the absolute stroke, the maximum axial load depending on the given mounting case can be obtained as F_{max} = 700 N.
Using the diagram of the maximum axial loading as a function of the travel speed, the maximum axial load depending on the ball screw lead and absolute stroke can be obtained as F_{max} = 4700 N.

For a selected motor side drive, the maximum drive torque $M_{p, MSD}$ = 2 Nm can be found (technical data table). Using the equation for the load torque calculation when the motor side drive is taken into consideration, the maximum axial load F_{max} = 3392 N can be calculated.

For selected mounting attachments, the maximum axial load is limited to the maximum axial load of the PNCE, i.e. F_{max} = 6020 N.

Finally, for this application example, the maximum axial load on the PNCE can be determined, i.e. F_{max} = 700 N. This is the smallest value of all the values obtained in the previous steps.

In order to improve the products in this catalogue the specifications are subject to change without notice.

UNIMOTION

CALCULATE YOUR OWN PROJECT!

The calculation program "LINEAR UNITS SELECTION" enables the fast and simple selection of a suitable linear axis based on your application data. As a result of the interpretation of this data, the program provides you with diverse information, e.g. driving torque, rotation speed, maximal process speed, durability and other information about a particular product. So contact us!

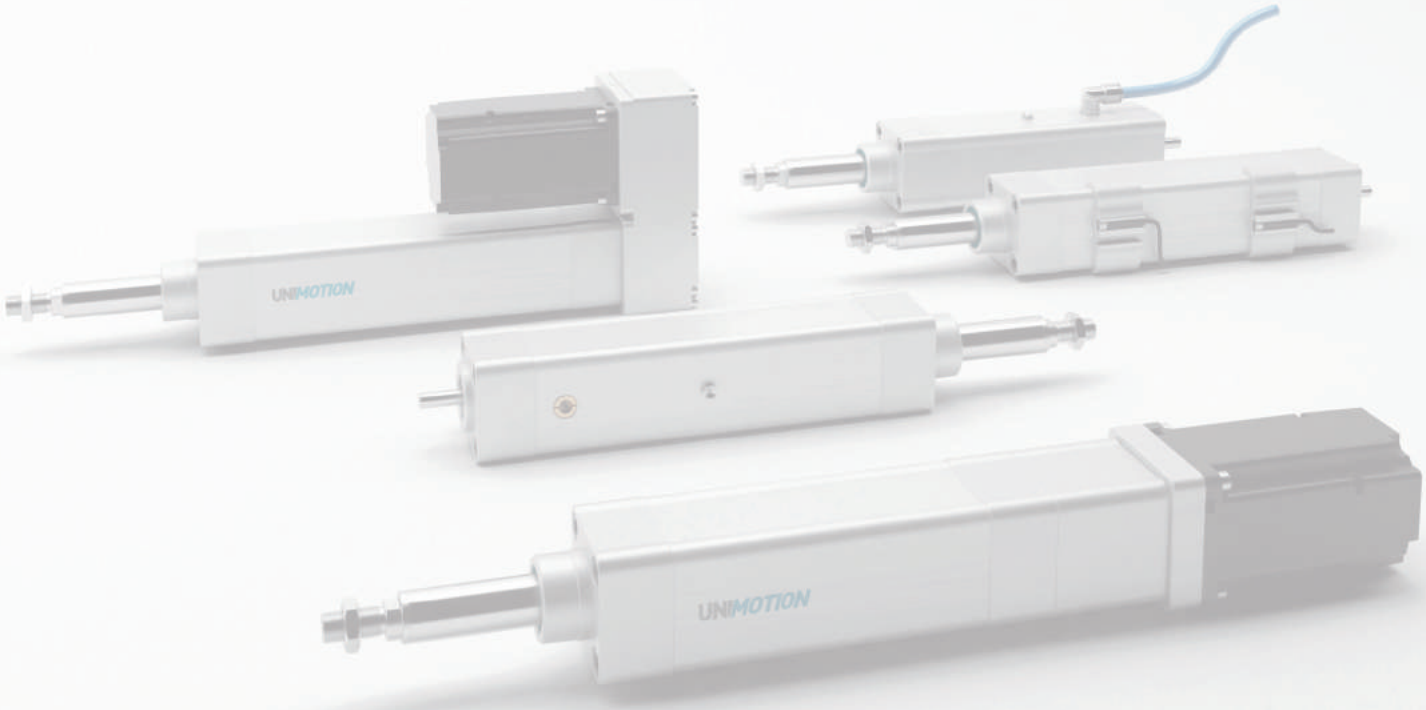

TÜV SÜD

WE DISTRIBUTE ALL OVER THE WORLD

We cover all major markets; if you wish to contact us, send us an enquiry and we would be happy to assist you.

UNIMOTION

| GERMANY

Unimotion GmbH
Waldstrasse 20
D - 78736 Epfendorf

Tel: +49 (0) 7404 930 85 60
Fax: +49 (0) 7404 930 85 61

www.unimotion.de
e-mail: vertrieb@unimotion.de

Unimotion: Januar 2017